WWW.HOLLY-CREATIONS.COM

20YEARS IN FISHING ACCESSORIES

WIDE RANGE FOR DIFFERENT FISHING METHODS

PROFESSIONAL AND DEDICATED

SUPPLY OUTSTANDING PRODUCTS FOR YOU

We master our business!

INNOVATION
IS OUR STRENGTH

Factory: Quanzhou Industrial Zone, Danyang, Jiangsu, CHINA
Tel: +86-18305290216 Fax: +86-511-86816788 Email: vivine630@holly-creations.com
Http://WWW.HOLLY-CREATIONS.COM

HOLLY CREATIONS
FISHING TACKLE

2019

We master our business!

INNOVATION
IS OUR STRENGTH

Dear customer,

Holly Creations Fishing Tackle Co. Ltd is a daughter company of Jiangsu Holly Corporation, a well-known and respected, public listed company in Jiangsu province, China.

We have been manufacturing fishing tackle since 1998. Now we are rapidly conquering the European market with a complete range of high quality carp, catfish, trout,match and sea tackle.

Holly Creations offers a comprehensive range of over 5,000 carp, catfish, trout,match and sea fishing items from its manufacturing units in Danyang, a city near Nanjing and Shanghai. Danyang is only a one-hour drive from Nanjing airport, a three-hour drive from Shanghai or just one-and-half-hour by the new high speed train from Shanghai.

The strength of Holly Creations lies in its experience with and its knowledge of the very complex and highly competitive European market. We not only understand what products are used for, but also how they are being used. That enables us to get the quality right and even make innovations. It gives us that little extra edge that makes all the difference. Innovation is our strength…

Every year we put huge investment into tooling costs and innovation budgets; this enables us to offer a wide range of items that are the result of our own innovation to our clients.

Holly Creations only accepts OEM business from wholesalers and is not aiming for orders from retailers. We ask a considerable minimum order quantity and amount to protect our wholesale clients.

Any information given to Holly Creations is treated with the highest confidentiality, and if a product is specially developed for a specific customer, it will be for that customer only.

It is fair to say that the huge success and fast growth of Holly Creations shows that we master our business. We invite you to visit our factory and/or showrooms.

Holly Creations Fishing Tackle Co.Ltd, Jiangsu, China
email: vivine630@holly-creations.com / website: www.holly-creations.com

INNOVATION IS OUR STRENGTH

We master our business!

CARP	Shelters & Umbrellas	4-7
	Bedchairs & Sleeping bags	8
	Luggage	9-16
	EVA Bag	17
	Unhooking Mats	18
	Sacks & Slings	19
	Rod Pods	20
	Buzzer Bars & Bank Sticks	21-22
	Small Stainless Steel Items	23
	Carp Set & Tackle Boxes	24
	Weigh Pod & Accessories	25
	landing net	26
	Monofilament	27
	Special Lines	28-30
	Rigs	31-37
	Systems	38-40
	Small Plastic Parts	41-45
	Clips & Swivels	46-47
	Hooks	48
	PVA Products	49
	Arti Baits	50
	Accessories	51-53
	Leads	54-56
CATFISH	Rigs	57-61
	Accessories	62-63
	Slings & Stretchers	64
MATCH	Luggage	65-68
FEEDER	EVA Bag	69
	Umbrellas	70
	Seatboxes & Chairs	71
	Accessories	72-74
	Leads & Baskets	75
	Terminal Tackles	76
	Rigs & Swivels	77
VARIOUS	Tackle & Outdoor	78-80
PACKAGING	Off The Menu	81-87

Holly Creations offers a wide range of shelters and umbrellas "off the menu". Of course, with all the experience and knowledge that we gathered over the years, we can make just about any shelter or umbrella. We have all the materials, most of them in stock: quality zippers, canvas (in many colours), pegs, rings, clips, Velcro tape... you name it and we have it. We feel confident that we can meet any requirement. So, if you are thinking of developing your own, unique shelter or umbrella, we can be of service - even if it requirs special aluminum parts or moulded parts. Tape or heat sealed seams? We can handle it. Need rubber zipper tags with your logo embossed? We can make it.

INNOVATION IS OUR STRENGTH | HOLLY CREATIONS FISHING TACKLE | SHELTERS & UMBRELLAS | CARP

OVAL 60" SHELTER

- 210D PU coated waterproof material
- Up to 10.000 mm hydrostatic head
- One man
- 2 coated telescopic aluminum storm poles
- 2 swivel caps fitted
- 135 g/m2 PE groundsheet
- Dedicated carry bag
- Weight: 3,8 kg
- 180 x 240 x 138 cm

Pegs included

HK0150

ELITE OVAL SHELTER

HK0068N
Elite oval shelter 3,0 m.

HK4093
Deluxe lite oval shelter 3,0 m with fibreglass ribs.

(Stormpoles not included.)

Alloy pipe + 210PU

HK0068GS
Dedicated ground sheet for the Elite oval shelter 3,0 m.

OVAL SHELTER 60" CAMOU

HK14447

- 210D PU coated waterproof material
- Up to 10.000 mm hydrostatic head
- One man
- 2 coated telescopic aluminum storm poles
- 2 swivel caps fitted
- Easy draw cord bag
- Weight: 3,8 kg
- 180 x 240 x 138 cm

OVAL SHELTER 60"

- 210D PU coated waterproof material
- Up to 10.000 mm hydrostatic head
- One man
- Brolly/tent option by a zipped on panel
- Netted front side windows with cover
- 4 coated telescopic aluminum storm poles
- 4 swivel caps fitted
- Dedicated carry bag
- Weight: 6,5 kg
- 135 g/m2 PE groundsheet

Pegs included

HK2605

STARTER UMBRELLA SHELTER

Iron pipe +
190PA nylon

HK2300 Starter umbrella shelter 2,2 m
HK2301 Starter umbrella shelter 2,5 m

ELITE UMBRELLA SHELTER

Alloy pipe +
190PU

HK0432 Elite umbrella shelter 2,2 m
HK0433 Elite umbrella shelter 2,5 m

STARTER SHELTER 3,0 METER WITH SIDE WINGS

Iron pipe + 190PA nylon
HK4094

EXECUTIVE UMBRELLA

Alloy pipe + 190PVC
With heat sealed seams,
alloy pipes and
handy tilt system.

HK8465 - Executive umbrella 2,5 m
HK8466 - Executive umbrella 3,0 m

The heat sealed seams shield can also be applied on our other umbrellas.

Handy tilt system

ECO UMBRELLA

Iron pipe +
190D nylon

HK2298E Eco umbrella tilt system 2,2 m
HK2299E Eco umbrella tilt system 2,5 m

DELUXE LIGHT NUBROLLY

Alloy pipe +
190PU

Handy tilt system

WITH FIBERGLASS RIBS

HK4089 Deluxe lite nubrolly 2,5 m
HK4090 Deluxe lite handy nubrolly 2,5 m
HK4091 Deluxe lite nubrolley 3,0 m
HK4092 Deluxe lite handy nubrolly 3,0 m

STANDARD NUBROLLY

Iron pipe +
190PU

Handy tilt system

HK4085 Standard nubrolly 2,2 m
HK4086 Standard handy nubrolly 2,2 m
HK4087 Standard nubrolly 2,5 m
HK4088 Standard handy nubrolly 2,5 m

ELITE NUBROLLY

Alloy pipe +
190PU

Handy tilt system

HK4081 Elite nubrolly 2,5 m
HK4082 Elite handy nubrolly 2,5 m
HK4083 Elite nubrolly 3,0 m
HK4084 Elite handy nubrolly 3,0 m

COMPACT ECO CHAIR WITH ARMREST

Padded 600D PVC coated colored cushion and powder coate lightweight steel frame, with front legs adjustable.

43 x 47 x 24/86 cm

HK14350

LIGHT DELUXE RECLINER CHAIR

Padded 600D PVC coated canvas and fleece cushion. Aluminum frame and adjustable backrest.

60 x 78 x 32/107 cm

HK4355

DELUXE RECLINER CHAIR

Same chair but with steel frame.

HK4356

COMFORT CHAIR WITH ARMRESTS

Extremely comfortable chair with a light but strong frame. The thick padding make even long sessions enjoyable.

90 x 65 x 90 cm

HK4699

DELUXE SLEEPING BAG

- Breakout zips on both sides
- Velcro on the top
- Carry bag included
- Dimensions: 210 x 84 cm
- Weight: 1,6 kg

HK2394

SIX LEG STANDARD BEDCHAIR WITH SIDE POCKET

With 600D PVC coated cushion and powder coated light weight steel frame,sturdy rigid construction, end section in easy wipe clean material.

213 x 78 x 28 cm

HK4353

Carp luggage (including rod holdalls) has been our core business for many years. They are one of our strong points. Carp luggage and, less obvious but equally important: bags for our other products, like rod pods, bivvies and even chairs and bedchairs. Needless to say that, over time, we got a wide range of parts. On the following pages you will find our standard range of luggage. With the available parts we can make just about any bag that you want, in any quality and style, at any price level.

Rod holdall and luggage items are available in various color and material option

AND MUCH, MUCH MORE...

HK14500

New

ELITE 5 ROD HOLDALL DELUXE 12'/13'

Padded 600D PVC coated material, with rubber mesh landing net bag and 12-part bankstick bag, reel cases padded with fleece.

DG207

STANDARD ROD HOLDALL 3 RODS 12'/13'

600D PVC coated material, with umbrella and bankstick bag, buzzer bar bag, full inner divider.

DG247

PADDED 3+3 ROD HOLDALL DELUXE 12'/13'

Padded 600D PVC coated material, with bags for bank-sticks, buzzer bars and an umbrella, full inner divider.

HK3342A

ECO ROD HOLDALL 3 RODS 12'/13'

450D PVC coated material, with umbrella and bankstick bag.

HK14501

New

2 ROD SLEEVE

Dimensions : 192x24x3cm

Padded 600D PVC coated material with clips to connect to rod holdall.

HK14386

3 ROD QUIVER

Dimensions: 128x21x3 cm.

-600D material with PVC coating
-Inner central pocket for storing brolly
-Two external pockets for bank sticks and landing net pole
-Three Velcro rod fastenings to secure rods in place
-Padded and adjustable shoulder strap

HK14499

New

ROD SLEEVE 12FT

Dimensions : 192x38cm

600D PVC coated material, base holdall for 2 rod sleeves.

DG010

ROD HOLDALL FOR ROD SLEEVES

Dimensions: 210 x 30 x 25 cm

600D PVC coated material, base holdall for 4 rod sleeves by clip fixing, umbrella and bankstick bag, big bag for landing net, storm poles.

INNOVATION IS OUR STRENGTH HOLLY CREATIONS FISHING TACKLE LUGGAGE CARP

CARRYALL LARGE
New

HK14494
Dimensions : 65x28x36cm

CARRYALL
HK14388

Dimensions: 52x28x29 cm.

ECO CARRYALL
HK3340

Dimensions: 51 x 31 x 35 cm.

CARRYALL MEDIUM
New

HK14496

Dimensions : 50x32x25cm

CARRYALL 70 LITER
OTVT005

Dimensions: 65 x 28 x 36 cm.

CARRYALL 40 LITER
HK0593

Dimensions: 51 x 35 x 35 cm.

CARRYALL
HK14389

Dimensions: 35x28x22 cm.

LUGGAGE BAG
HK3046

Dimensions: 60 x 29 x 37 cm.

RUCK SACK DOUBLE COLOUR 70 LITER
HK2649

Dimensions: 50 x 32 x 60 cm.

HANDY CARRYALL
HK2328

Dimensions: 50 x 32 x 25 cm.

STORAGE BAG
HK14371 L 68x44x37cm
HK14370 M 54x34x34cm

RUCKSACK
HK14387

Dimensions: 48x27x47 cm.

COOLING BAG DELUXE
HK14297

Dimensions: 54x32x40cm

FOOD COOLING BAG
HK14497

New

Dimensions : 55x41x38cm

COOLING BAG
HK0281

Dimensions: 30 x 20 x 30 cm.

BAIT COOLING BAG DELUXE
HK0280

Dimensions: 27 x 20 x 22 cm.

COOLING BAG DELUXE
HK0330

Dimensions: 43,5 x 21,5 x 22,5 cm.

COOLING BAG
HK14392

Dimensions: 40x19x17 cm.

COOLING MEDIUM
HK14495

New

Dimensions : 39x15x18cm

COOLING BAG LARGE
HK14498

New

Dimensions : 30x40x20cm

CAMERA BAG DELUXE
HK0889

Dimensions: 21x12x19.5cm

METHOD BOWL
HK0331W

Dimensions: Ø26 x 22 cm.

REEL CASE
DG932

Dimensions: 22x17x7cm

BITS BAG
HK14390

Dimensions: 18x14x9 cm.

LEAD AND BITS BAG
HK14298

Dimensions: 24x15x8cm

ACCESSORY BAG
HK14395

Dimensions: 28x16.5x9 cm.

TWO PERSON CUTLERY SET WITH POUCH
HK2653

Dimensions: 61 x 30,5 cm.

BUZZER BAR LONG BAG
OTVT001

Dimensions: 21 x 12 x 19,5 cm.

RIG WALLET
DG928

Dimensions: 26 x 13 x 4 cm.

NEEDLE SET RIG BOARD COMBO
HK8120

Dimensions: 24,5 x 15,5 x 4 cm.

6 POT CASE
HK14393

Dimensions: 23x16x10 cm.

BOILIE BAG
HK14391

Dimensions: 30x18x15 cm.

STIFF RIG WALLET
HK14369

Dimensions: 35x24x8cm

4 POT CASE
HK14394

Dimensions: 16x16x9.5 cm.

ACCESSORY BAG
HK14300 S 16x11x9cm
HK14301 M 25x13x9cm
HK14302 L 28x13x9cm

RUBBER DRY BAG
HK14303 RUBBER DRY BAG S 16x16x6cm
HK14304 RUBBER DRY BAG M 36x11x20cm
HK14305 RUBBER DRY BAG L 32x16x24cm

EVA BAG
HK14502 L 41x28x34cm
HK14503 M 38x28.5x26cm
HK14504 S 36x24x23cm

New

EVA BAG
HK14397 M 40x25x27 cm
HK14398 L 45x27x30 cm

EVA BAG
HK14508
36x23x9cm X1
33x10.5x8cm X1
13x9x8cm X3

New

EVA BAG
HK14510
36x25.5x9cm X1
33x10.5x8cm X1
13x9x8cm X3

New

EVA BAG
HK14509
27x17x10cm X1
24x15.5x9.5cm X1
21x14.5x9cm X1
13x9x8cm X2

New

EVA BAG
HK14511
27x17x8cm X1
21x14.5x7.5cm X1
16.5x10x7cm X1

New

EVA BAG
HK14512
Ø24x8cm X1
Ø21x7.5cm X1
Ø18x7cm X1

New

EVA BAG
HK14444 S 20x20x20 cm
HK14399 M 22x22x25 cm
HK14400 L 24x24x28 cm

New

EVA BAG
HK14513
Dimensions : 22x22x20cm

New

EVA BAG
HK14505 S 21x14.5x8cm
HK14056 M 24x15.5x9cm
HK14507 L 27x17x10cm

New

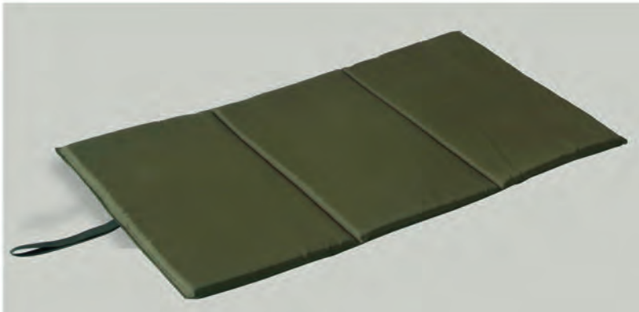

UNHOOKING MAT 100 X 60 cm

Easy to carry, ideal when stalking for carp with, for instance, a float.

100 x 60 cm

HK3336

UNHOOKING MAT 120 X 60 cm

HK14514

New

CRADLE

HK14384

Dimensions

CARP CRADLE WITH LEGS

Completely foldable for easy transport or storage. Made with 210D, PVC coated material. Fully padded.

110 x 53 x 43 cm

HK3166

Optional: reflective tag on the cord.

ECO CARP SACK WITH BAG

100 x 80 cm

HK3341

ECO BASIC WEIGH SLING

100 x 65 cm

HK3343

EXTREME FISH CARE / RECOVERY WEIGH SLING

117 x 62 cm

100x100D PVC coated material, reflective straps on the pole floats.

HK3404

ELITE CARP SACK

123 x 81 cm

Breath through lower corners, bank stick adaptor fitting, twin zipped top, two carry straps, comes in a carry bag.

HK3145

STAINLESS STEEL COMPACT TWIN BACK BONE ROD POD

HK3253

A luxuary, compact, stainless steel, twin back bone rod pod. The buzzerbars can be screwed off and then used as (goal post) buzzerbars, when preferred.

- Adjustable in height and length
- Outer twist locks
- Buzzer/butt locks
- Dedicated carry bag included
- Dimensions: 28 x 38 x 65 cm (smallest possible size)

EXTREMELY HIGH QUALITY

HK1216N

BLACK TWIN BACK BONE ROD POD

- Leightweight aluminum construction
- Adjustable in height and length
- Outer twist locks
- Buzzer/butt locks
- Dedicated carry bag included
- Dimensions: 40 x 62 x 86 cm (extended: 52 x 90 x 162)

4 ROD BUZZERBARS FOR HK1216N

Set of 2 buzzerbars for 4 rods.

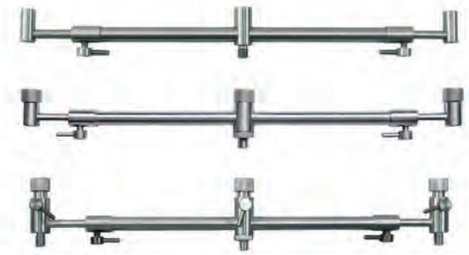

Adjustable stainless steel (SS) buzzer bar - HK0001

Adjustable SS buzzer bar with buzzer/butt locks (3 rods) - HK0002

Adjustable SS buzzer bar with buzzer/ butt locks, goal posts and quick release adaptors (3 rods) - HK0003

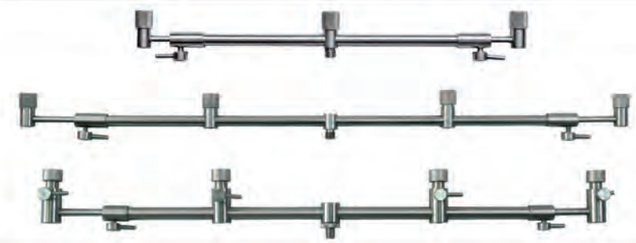

Adjustable SS slim buzzer bar with buzzer/butt locks (3 rods) - HK0373

Adjustable SS slim buzzer bar with buzzer/butt locks (4 rods) - HK0393

Adjustable SS slim buzzer bar with buzzer/butt locks and quick release adaptors (4 rods) - HK0392

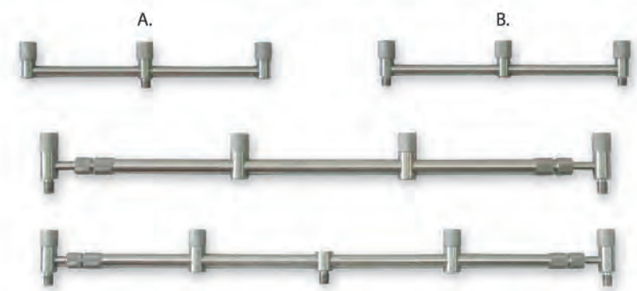

A. Fixed SS buzzer bar with butt locks HK3366/67/68/69 (for 2, 3, 4 or 5 rods)

B. Fixed SS dedicated goal post buzzer bar with butt locks HK3370/71/72/73 (for 2, 3, 4 or 5 rods)

Adj. SS dedicated goal post buzzer bar with outer twist locks and butt locks HK3378/79/80/81 (for 2, 3, 4 or 5 rods)

Adj. SS buzzer bar with outer twist locks, butt locks and goal posts HK3374/75/76/77 (for 2, 3, 4 or 5 rods)

Fixed SS ultra slim buzzer bar HK3364 (for 2 rods)

Fixed SS ultra slim buzzer bar HK3365 (for 3 rods)

HEAVY DUTY STAINLESS STEEL BANK STICK

HK0950 - 50 cm
HK0951 - 75 cm
HK0952 - 90 cm
HK0953 - 125 cm

Extra thick, extra strong!

STAINLESS STEEL BANK STICK WITH OUTER TWIST LOCK

HK0010 - 30 cm
HK0011 - 50 cm
HK0012 - 75 cm

STAINLESS STEEL BANK STICK WITH BUZZER BUTT LOCK

HK0007 - 30 cm
HK0008 - 50 cm
HK0009 - 75 cm

STAINLESS STEEL BANK STICK WITH SCREW POINT

HK3496 - 30 cm
HK3496 - 50 cm
HK3496 - 75 cm

BUZZERBAR BLACK 2 RODS
HK14422

BUZZERBAR BLACK 3 RODS
HK14423

ADJUSTABLE BUZZERBAR BLACK 3RODS
HK14419

ADJUSTABLE BUZZERBAR BLACK WITH BUZZER/BUTT LOCKS 3RODS
HK14420

ADJUSTABLE BUZZERBAR BLACK WITH BUZZER/BUTT LOCKS 4RODS
HK14421

ADJUSTABLE BUZZERBAR BLACK WITH BUZZER/BUTT LOCKS GOALPOST
HK14424

BANKSTICK BLACK
HK14425 50cm
HK14426 75cm
HK14427 90cm
HK14428 125cm

BANKSTICK BLACK WITH SCREW POINT
HK14429 50cm
HK14430 75cm
HK14431 90cm
HK14432 125cm

STAINLESS STEEL ROD STABILIZER
Incorporates two telescopic rods to keep your rod in position in adverse conditions.

Dedicated, heat sealed blister.

HK3716

STAINLESS STEEL SWIVEL CAMERA ADAPTOR

HK8129 Blister E.

STAINLESS STEEL CAMERA ADAPTOR

HK2216 Dedicated blister.

STAINLESS STEEL ALARM TILT ADAPTOR
Adjustable. Fits on most banksticks.

HK8112 Blister E.

STAINLESS STEEL BALL SWIVEL CAMERA ADAPTOR

HK4710 Blister E.

STAINLESS STEEL ADJUSTABLE BACK REST

HK11012

STAINLESS STEEL SPACER
For when you need some extra space under your bite alarm, for instance to fix rod guards *and* a hanger at the same time.

HK4711 Blister A.

STAINLESS STEEL PULLER

HK11015 Blister E.

STAINLESS STEEL COMBO SKIN LINE STRIPPER

HK11016 Blister H.

MAGNETIC QUICK RELEASE ADAPTOR
HK14456

New

U-HEAD ROD REST

HK3291

V-HEAD ROD REST

HK3290

ANTI DRAW BACK ROD REST

HK3123

RUBBER HEAD ROD REST

HK3292

QUICK RELEASE ADAPTOR

HK1315A

QUICK RELEASE ADAPTOR GUNSMOKE

HK14157

CARP ROD REST

Only the pod+3 swingers+6 rodrests is HK14254

HK14235

SLIM BITE ALARM

HK14206

ECO BITE ALARM

Blue LEDs, ergonomic volume and tone control, stainless thread fixing.

HK3097

HANGERS WITH SQUARE CHAIN AND FLUO HEAD

HK3104 Blue
HK3105 Green
HK3106 Yellow
HK3107 Red

BITE INDICATOR KIT

HK14158

CARP BOX COMPLETE "BIG"

With many small boxes and a rig box with pins.

HK4302

CARP BOX COMPLETE "SMALL"

HK4303

New

CARP BOX

HK14515

WEIGH POD

HK14433
-Two-piece legs in the middle to stop the legs from slipping under pressure
-Stable structure
-Made from iron
-Comes with own straw-cord bag

New

HOTE WATER BOTTLE

HK14436

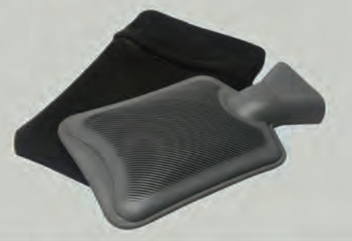

BAITING SPOON WITH FIBRE GLASS HANDLE

HK14448

Bivvy Table Increadibly Stable!

RIG TABLE

HK11025

A bivvy table with a drawer to store your rigs and... a socalled Rig steam rack: for holding rigs under tension to steam them straight (without burning your fingers). Very convenient when you're at the bank and a carp managed to ruin your carefully tied and straightened combi rig or stiff rig.

Same material, same (telescopic) legs as our rig table, only somewhat smaller, to make it fit in your tackle bag better.

The table has a ruler, to help you make your rigs on the spot.

The rig steam rack

ECO LANDINGNET

HK4888

2pc fiber handle, 42''green net with fiber arms, with plastic bag.

STANDARD LANDINGNET

HK2601

1pc fiber handle, 42''green net with fiber arms, with bag in easy draw cord

CARBON LANDINGNET

HK14311

2pc carbon handle, 42''camou net with carbon arms, with 600din zipped bag

The strength of Holly Creations, as a carp end game manufacturer, does not only lie in its high quality parts and its ability to combine those parts into perfect carp rigs and systems. It also lies in the width of its assortment: hooks, hooklinks, swivels and numerous plastic parts, like lead clips. No need to shop around in China. We have got it all... The only thing missing sofar: monofilament main lines and a shock leader. We managed to develop a well thought through and balanced range of monofilament lines that covers all carp anglers needs.

Monofilament main lines & shock leader

HK-number	Diameter	Test
HK14000-10	0,28 mm	10 Lb
HK14000-12	0,30 mm	12 Lb
HK14000-15	0,35 mm	15 Lb

HK-number	Diameter	Test	Colour
HK14001-10	0,28 mm	10 Lb	Green
HK14001-12	0,30 mm	12 Lb	Green
HK14001-15	0,35 mm	15 Lb	Green
HK14001-18	0,38 mm	18 Lb	Green
HK14002-10	0,28 mm	10 Lb	Brown
HK14002-12	0,30 mm	12 Lb	Brown
HK14002-15	0,35 mm	15 Lb	Brown
HK14002-18	0,38 mm	18 Lb	Brown

HK-number	Diameter	Test
HK14003-10	0,28 mm	10 Lb
HK14003-12	0,32 mm	12 Lb
HK14003-15	0,35 mm	15 Lb

HK-number	Diameter	Test
HK14004-35	0,50 mm	35 Lb

Reliable quality

It is common knowledge that many companies and brands still exaggerate the strength of their lines and/or "underspec" the thickness, to look stronger and thinner than the competition. Others do exactly the opposite and underspec the breaking strain, in an attempt to impress the anglers with the strength. Not us. Our monofilaments are all of the highest thinkable quality. No need to twist the truth...

Distance Casting main line

The low diameter and the extreme softness of this line makes that it simply flies of the spool and through the guides, making it possible to cast extreme distances. Available in three sizes. 1.000 meter on a spool. Comes in a brown and green camouflage colour.

Abrasion Resistant main line

This well sinking super tough line received a special treatment to increase its abrasion resistance enormously. Because of that it is slightly less supple than the Distance Casting line, but only slightly. This is the line for fishing in waters full of weed or snags. Available in four sizes. 1.000 meter on a spool. In green or brown colour.

Fluorocarbon main line

Very abrasion resistant and heavy main line. Fast sinking. Fluorocarbon reflects light like water, making it virtually impossibl to see underwater. Available in three sizes. 175 meter on a spool.

Skock Leader line

Extremely abrasion resistant yet still supple enough to tie to a main line. 80 meter on a spool.

All spools have an as big as possible inner diameter and are packed in a printed paper box with euro slot. The fluorocarbon and shock leader lines can also be packed in a plastic ring with euro slot (as shown left).

*"Downforce carp skinlines, leader lines and hooklink braids are **ultrafast sinking**. They say "cream always floats to the top" but we really made it sink like a brick...*

Downforce skinlines, leader lines & braids — Ultrafast sinking

HK4312 HK4313 HK4309 HK4310 HK4311

HK4317 HK4318

GREAT ANTI TANGLE PROPERTIES

HK4338 HK4340

- EASY TO SPLICE
- SUPER BOTTOM HUGGING
- ALTERNATIVE FOR LEADCORE

ULTRAFAST SINKING

HK4335 HK4336

SMOOTH AS SILK

Downforce carp lines are heavier and sink faster then any other kind of carp line. Ideal for outsmarting line shy carp. It's the latest, it's the best...

Downforce Semi-stiff Skinline
Ultrafast sinking skinline with a semi-stiff coating, specially developed for stiff rigs or other rigs that require some stiffness. Easy to strip. Ultrafast sinking. Matte finish. Available in 3 concealing solid colours and two camouflage colours. Any colour available in 15, 25 or 35 Lb. 20 meter on a spool.

Downforce Soft Skinline
Has the same nice characteristics as the Downforce Semi-stiff skinline except it is much softer. Soft skinlines are mainly used because of their great anti tangle properties. Available in two camouflage colours and 20 & 30 Lb. 20 meter on a spool.

Downforce Leader Line
Easy to splice. Without any metal core. Very heavy and very soft so: very bottom hugging. Available in two camouflage colours. Diameter: 0,65 mm. Breaking strength: 45 Lb. 10 meter on a spool.

Downforce Super Soft Hooklink
Super soft, thin and ultrafast sinking 8-braid hooklink. Available in the two most popular carp colours. Breaking strength: 25 Lb. 20 meter on a spool.

"Sinking skinlines and various types of hooklink braids with different characteristics, for different applications. For every thinkable rig we have the right line."

Various skinlines & hooklink braids — Various

Spool 3 in Blister X.

HK9113 HK9112 HK3703 HK3704 HK3705

Spool 3 in Blister X.

HK4306 HK4307 HK4308

GREAT ANTI TANGLE PROPERTIES

Spool 2 in Blister W.

HK3706 HK3707 HK3708 HK9300

FAST SINKING

Spool 2 in Blister W.

HK3709 HK3710 HK3711

HIGHLY ABRASION RESISTANT

On this page you can find a big variety of different kinds of hooklinks, each with different characteristics, for different preferences and applications. For every thinkable rig we have a solution.

Semi-stiff skinline
Directly comparable with the Downforce Semi-stiff Skinline except for the more moderate sink rate. Available in 3 different breaking strength's: 15, 25 and 35 Lb. 20 meter on a spool.

Soft skinline
A soft, slow sinking skinline with a 100% Dyneema® core. Prefered by many because of the great anti tangle properties. Available in three different colours and 3 different breaking strength's: 15, 25 and 35 Lb. 20 meter on a spool.

Fast sink hooklink
Nice and soft, fast sinking hooklink in various colours. Available **in 3 different breaking strength's: 15, 25 and 35 Lb.** 20 meter on a spool.

Abri hooklink
As the name already suggests: this is a highly abrasion resistant hooklink. Thanks to a special coating this soft hooklink can withstand up to 400% more friction than uncoated braids. Available in three different colours. Breakings strength's: 15, 25 and 35 Lb. 20 meter on a spool.

Super soft hooklink
Super soft and supple, 100% Dyneema® 8-braid. Neutral bouyancy. Available in Moss Green. Breaking strength: 20 Lb.

Spool 2 in Blister W.

SMOOTH AS SILK

HK9110

"We offer lead core in a wide range of colours. There are two types: with 12 yarn and 16 yarn braid. Both are equally easy to splice. Very bottom hugging."

Lead core, fluorocarbon hooklink & chod mono | Easy to apply

Spool 3 in Blister X.

HK11400 HK11401 HK11402 HK11403 HK11404 HK11405 HK11406 HK11407

12 Yarn lead core
A wide range of 12 yarn leadcore. Ø 0,90 mm, 10 mtr, 45 Lb.

16 Yarn ultrafine lead core
Two colours of 16 yarn, ultrafine leadcore. In the event the lead wire breaks it won't stick out so easily. Ø 0,90 mm, 45 Lb.
10 meter on a spool.

Weedlook lead core
12 yarn, weedlook leadcore. Just as easy to splice as "normal" lead core. 45 Lb. 5 meter on a spool Available in Brown, Green and Camou colour.

Fluorocarbon hooklink
Virtually invisible underwater and fast sinking. It has the right stiffness for stiff rigs.
20 meter on a spool.

Ø 0,35 mm / 15 Lb
Ø 0,40 mm / 20 Lb
Ø 0,45 mm / 25 Lb
Ø 0,50 mm / 30 Lb

Chod mono
This stiff, very low memory hooklink monofilament lets shape itself easily by just pulling it through your thumb and index finger. Also ideal for making stiff rigs, the Withy Pool rig and combi rigs. 20 meter on a spool.

Ø 0,40 mm / 15 Lb
Ø 0,45 mm / 20 Lb
Ø 0,50 mm / 25 Lb
Ø 0,55 mm / 30 Lb

Spool 4 in a Blisterbox.

HK9075

Spool 3 in Blister X.

HK9502 HK9503

Spool 3 in Blister X.

HK9076

Spool 5 in a Blisterbox.

See page 49 for our Weedlook lead core systems and the three different colours.

HK11408 Brown
HK11409 Green
HK11410 Camou

CARP RIGS

All rigs on this page are packed in our new, extra long OPP bag.

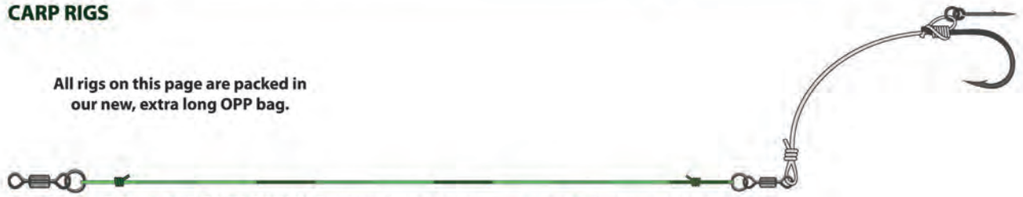

***HINGED STIFF D-RIG FAST SINKING** - Size: 2, 4 or 6. Test: 20 or 30 lb. Length: 23 cm.*

	Summer Camou	Autumn Camou
Downforce	HK9419	HK9418

Green = soft skin line

For all the mono parts on this page we use our Chod mono.

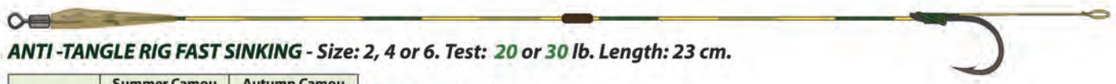

***ANTI -TANGLE RIG FAST SINKING** - Size: 2, 4 or 6. Test: 20 or 30 lb. Length: 23 cm.*

	Summer Camou	Autumn Camou
Downforce	HK9413	HK9412

Green = soft skin line

***CLASSIC COMBI-RIG "BLACK & GREEN"** - Size: 2, 4, 6 or 8. Test: 15 or 25 lb. Length: 23 cm.*

	Black & Green
Regular	HK9414

***CLASSIC COMBI-RIG "BLACK & WHITE"** - Size: 2, 4, 6 or 8. Test: 15 or 25 lb. Length: 23 cm.*

	Black & White
Regular	HK9415

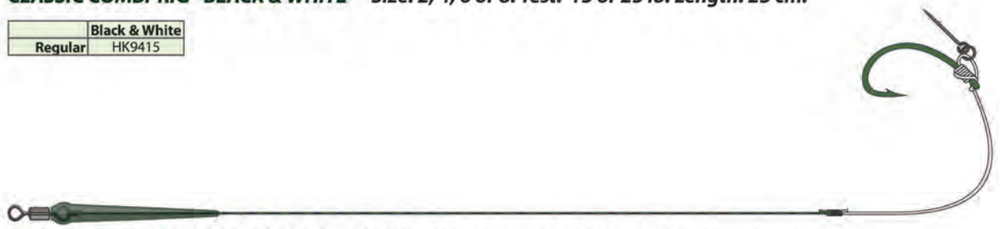

***CLASSIC WITHY POOL RIG "BLACK & GREEN"** - Size: 2, 4, 6 or 8 . Test: 15 or 25 lb. Length: 23 cm.*

	Black & Green
Regular	HK9416

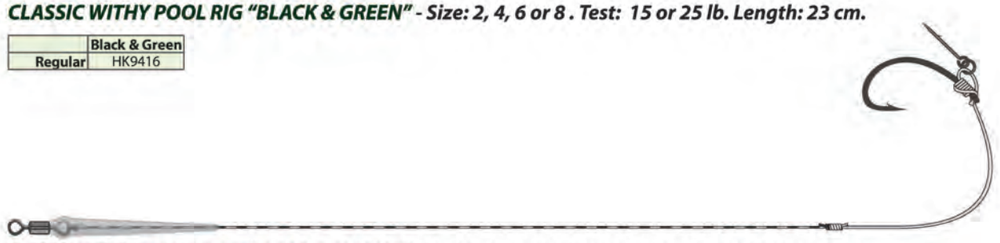

***CLASSIC WITHY POOL RIG "BLACK & WHITE"** - Size: 2, 4, 6 or 8 . Test: 15 or 25 lb. Length: 23 cm.*

	Black & White
Regular	HK9417

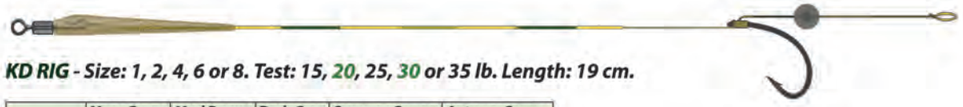

***KD RIG* - Size: 1, 2, 4, 6 or 8. Test: 15, 20, 25, 30 or 35 lb. Length: 19 cm.**

	Moss Green	Mud Brown	Dark Grey	Summer Camou	Autumn Camou
Regular	HK9406	HK9407	HK9408	HK9404	HK9405
Downforce	HK9396	HK9397	HK9398	HK9399	HK9403

Green = soft skin line

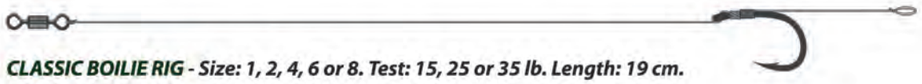

***CLASSIC BOILIE RIG* - Size: 1, 2, 4, 6 or 8. Test: 15, 25 or 35 lb. Length: 19 cm.**

	Black & White
Regular	HK9005

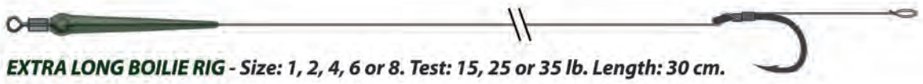

***EXTRA LONG BOILIE RIG* - Size: 1, 2, 4, 6 or 8. Test: 15, 25 or 35 lb. Length: 30 cm.**

	Black & White
Regular	HK9019

***HEAVY BOILIE RIG* - Size: 1, 2, 4 or 6. Test: 35 lb. Length: 19,5 cm.**

	Pitch Black
Regular	HK9012

***ADJUSTBALE HAIR RIG* - Size: 1, 2, 4, 6 or 8. Test: 15, 25 or 35 lb. Length: 19 cm.**

	Black & White
Regular	HK9042

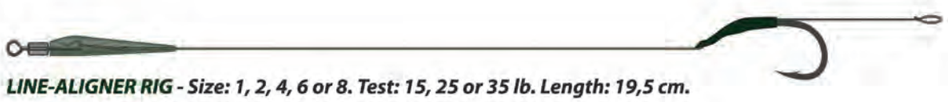

***LINE-ALIGNER RIG* - Size: 1, 2, 4, 6 or 8. Test: 15, 25 or 35 lb. Length: 19,5 cm.**

	Olive Green
Regular	HK9013

***EXTRA SOFT BOILIE RIG* - Size: 1, 2, 4, 6 or 8. Test: 20 lb. Length: 18 cm.**

	Moss Green	Mud Brown
Regular	HK9011	
Downforce	HK9368	HK9369

INNOVATION IS OUR STRENGTH HOLLY CREATIONS FISHING TACKLE RIGS CARP

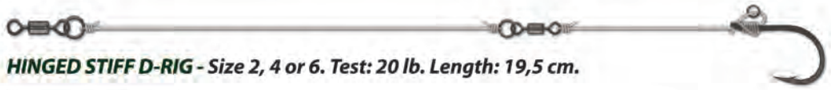

***HINGED STIFF D-RIG* - Size 2, 4 or 6. Test: 20 lb. Length: 19,5 cm.**

	Clear
Regular	HK9041

ALL RIGS ARE ALSO AVAILABLE WITH BARBLESS HOOKS

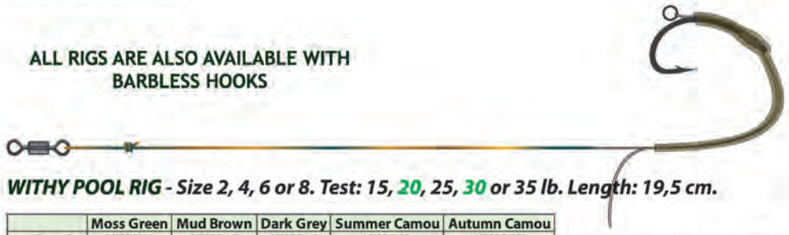

***WITHY POOL RIG* - Size 2, 4, 6 or 8. Test: 15, 20, 25, 30 or 35 lb. Length: 19,5 cm.**

	Moss Green	Mud Brown	Dark Grey	Summer Camou	Autumn Camou
Regular	HK9044	HK9045	HK9046	HK9362	HK9363
Downforce	HK9389	HK9390	HK9391	HK9392/HK9394	HK9393/HK9395

Green = soft skin line

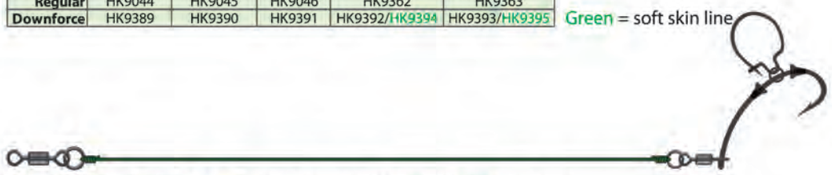

***360 DEGREE MAGGOT RIG* - Size 2. Test: 15, 20, 25, 30 or 35 lb. Length: 19,5 cm.**

	Moss Green	Mud Brown	Dark Grey	Summer Camou	Autumn Camou
Regular	HK9034	HK9035	HK9036	HK9360	HK9361
Downforce	HK9382	HK9383	HK9384	HK9385/HK9387	HK9386/HK9388

Green = soft skin line

***360 DEGREE LEAD CORE RIG* - Size 2. Test: 45 lb. Length: 19,5 cm.**

	Sand	Classic Camou Green	Classic Camou Brown
Regular	HK9040	HK9038	HK9039

***360 DEGREE RIG (FLUOROCARBON)* - Size 2. Test: 20 lb. Length: 19,5 cm.**

	Clear
Regular	HK9037

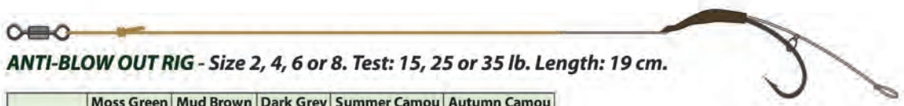

***ANTI-BLOW OUT RIG* - Size 2, 4, 6 or 8. Test: 15, 25 or 35 lb. Length: 19 cm.**

	Moss Green	Mud Brown	Dark Grey	Summer Camou	Autumn Camou
Regular	HK9001	HK9002	HK9003	HK9348	HK9349
Downforce	HK9363	HK9364	HK9365	HK9366	HK9379

***POP-UP BOILIE RIG* Size 2, 4, 6 or 8. Test: 15, 25 or 35 lb. Length: 19 cm.**

	Black & Green
Regular	HK9016

New Rig Aligner Is Optional For the Rigs

***FLUOROCARBON MAGGOT CLIP RIG** - Size: 2, 4, 6 or 8. Test: 20 lb. Length: 19,5 cm.*

	Clear
Regular	HK9014

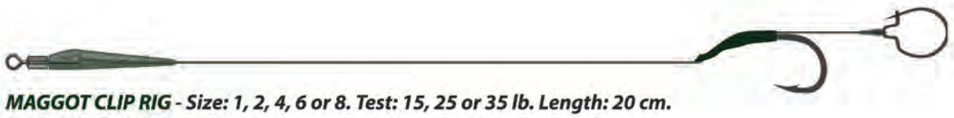

***MAGGOT CLIP RIG** - Size: 1, 2, 4, 6 or 8. Test: 15, 25 or 35 lb. Length: 20 cm.*

	Olive Green
Regular	HK9015

***CLAW RIG** - Size: 1, 2, 4, 6 or 8. Test: 15, 25 or 35 lb. Length: 19 cm.*

	Olive Green
Regular	HK9006

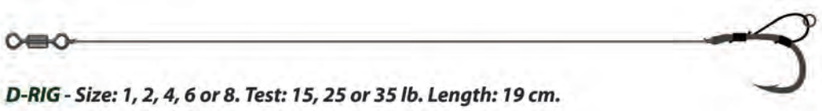

***D-RIG** - Size: 1, 2, 4, 6 or 8. Test: 15, 25 or 35 lb. Length: 19 cm.*

	Black & White
Regular	HK9010

***ANTI-SNAG RIG** - Size: 2, 4, 6 or 8. Test: 15, 25 or 35 lb. Length: 19,5 cm.*

	Pitch Black
Regular	HK9004

***TRIGGER STIFF RIG** - Size: 1, 2, 4, 6 or 8. Test: 15, 25 or 35 lb. Length: 18 cm.*

	Moss Green	Mud Brown	Dark Grey	Summer Camou	Autumn Camou
Regular	HK9020	HK9021	HK9022	HK9350	HK9351
Downforce	HK9370	HK9371	HK9372	HK9373	HK9374

***COMBI RIG** - Size 1, 2, 4, 6 or 8. Test: 15, 20, 25, 30 or 35 lb. Length: 19,5 cm.*

	Moss Green	Mud Brown	Dark Grey	Summer Camou	Autumn Camou
Regular	HK9007	HK9008	HK9009	HK9352	HK9353
Downforce	HK9375	HK9376	HK9377	HK9378/HK9380	HK9379/HK9381

Green = soft skin line

INNOVATION IS OUR STRENGTH HOLLY CREATIONS FISHING TACKLE RIGS CARP

CHOD RIG
Size 4, 6 or 8. Test: 20 lb. Length: 10 cm.

	Clear
Regular	HK9023

SLEEVED CHOD RIG
Size 4, 6 or 8. Test: 20 lb. Length: 11 cm.

	Clear
Regular	HK9024

COMBI CHOD RIG
Size 2, 4, 6 or 8. Test: 15, 25 or 35 lb. Length: 13 cm.

	Moss Green	Mud Brown	Dark Grey	Summer Camou	Autumn Camou
Regular	HK9028	HK9029	HK9030	HK9358	HK9359

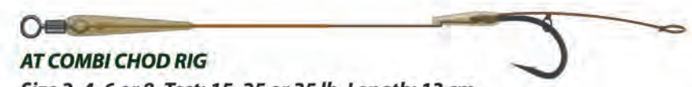

AT COMBI CHOD RIG
Size 2, 4, 6 or 8. Test: 15, 25 or 35 lb. Length: 13 cm.

	Moss Green	Mud Brown	Dark Grey	Summer Camou	Autumn Camou
Regular	HK9031	HK9032	HK9033	HK9354	HK9355

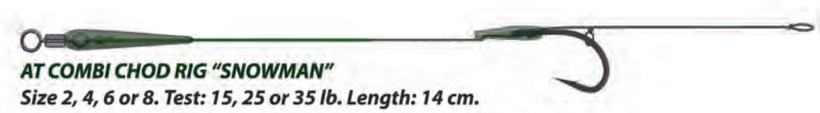

AT COMBI CHOD RIG "SNOWMAN"
Size 2, 4, 6 or 8. Test: 15, 25 or 35 lb. Length: 14 cm.

	Moss Green	Mud Brown	Dark Grey	Summer Camou	Autumn Camou
Regular	HK9025	HK9026	HK9027	HK9356	HK9357

***STIFF RIG** - Size 2, 4, 6 or 8. Test: 20 lb. Length: 17 cm.*

	Clear
Regular	HK9017

***STIFF D-RIG** - Size 2, 4, 6 or 8. Test: 20 lb. Length: 17 cm.*

	Clear
Regular	HK9018

ALL RIGS ARE TIED WITH MATTE, TEFCON (PTFE) COATED HOOKS

All packed in an OPP bag.

"Regular" means: not Downforce. The skin line we use for the rigs is semi-stiff, unless indicated differently.

NEW RIGS, BLISTER AND OPP BAG PACKAGING ARE OPTIONAL

PVA BAG RIGS-Size 2.4.6.8 Test:25lb. Length:13cm
HK14374, PVA BAG RIG MUD BROWN
HK14375, PVA BAG RIG OLIVE GREEN

KD RIG-Size 2.4.6.8 Test:25lb. length:20cm
HK14376, KD RIG MUD BROWN
HK14377, KD RIG OLIVE GREEN

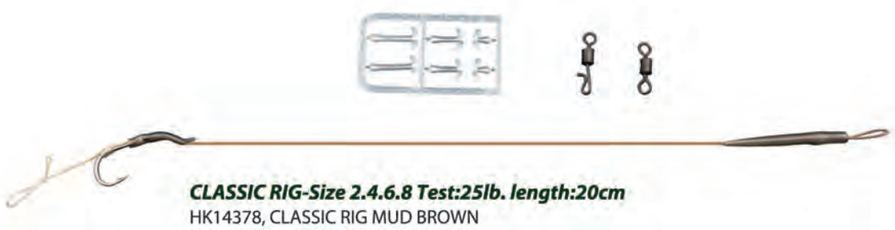

CLASSIC RIG-Size 2.4.6.8 Test:25lb. length:20cm
HK14378, CLASSIC RIG MUD BROWN
HK14379, CLASSIC RIG OLIVE GREEN

New

HK14613 HK14614 HK14615

CHOD RIG-Size 2.4.6.8 Test:25lb.length:4cm
CHOD RIG WITH CHOD MONO

INNOVATION IS OUR STRENGTH HOLLY CREATIONS FISHING TACKLE RIGS CARP

All these rigs are standard for starters; Holly not only can make high-end rigs as front pages but also basic ones which can help to arouse their interest and confidence in carp fishing.

CLASSIC BOILIE RIG-Size 2.4.6.8 Test: 25lb. Length: 21.5cm

HK14120 Mud Brown
HK14121 Black & White
HK14122 Olive Green
HK14136 Black & Green

CLASSIC BOILIE RIG-Size 2.4.6 Test: 25lb. Length: 21.5cm

HK14123 Mud Brown
HK14124 Black & White
HK14125 Olive Green
HK14137 Black & Green

CARP RIG STANDARD-Size 2.4 Test: 35lb. Length: 22cm

HK14126 Ocean Blue
HK14127 Steel Grey
HK14138 Pitch Black

CLASSIC RIG -Size 2.4 Test: 35lb. Length: 22cm

HK14128 Black & Green
HK14129 Olive Green
HK14139 Black & White
HK14140 Mud Brown

COVER RIG -Size 2.4 Test: 35lb. Length: 22cm

HK14130 Pitch Black
HK14131 Steel Grey
HK14141 Ocean Blue

COATED RIG -Size 2.4 Test: 25lb. Length: 18cm

HK14132 Mud Brown
HK14133 Moss Green
HK14142 Dark Grey
HK14143 Summer Camou
HK14144 Autumn Camou

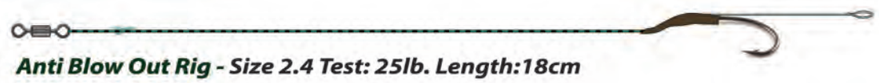

Anti Blow Out Rig - Size 2.4 Test: 25lb. Length:18cm

HK14134 Black & Green
HK14135 Olive Green
HK14145 Black & White
HK14146 Mud Brown

WEEDLOOK LEAD CORE SYSTEMS

Blister P.

MADE WITH 12 YARN
45 LB WEEDLOOK LEAD CORE

AVAILABLE IN 80 AND 100 CM.

The Weedlook leadcore systems are made with our 12 yarn, 45 Lb lead core but have an extra layer of "weed". That layer can easily be pushed back, after which the lead core can easily be spliced. Once that's done the weed can simply be pulled back. It's beautiful! To avoid that air bubbles get trapped in between the weed fibres we recommend to thoroughly wet the Weedlook lead core before casting it out.

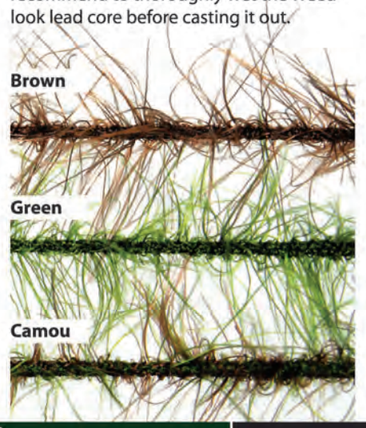

HK-number	Model	Colour
HK11225	Weedlook lead core gated lead clip leader with QC swivel	Brown
HK11226	Weedlook lead core gated lead clip leader with QC swivel	Green
HK11227	Weedlook lead core gated lead clip leader with QC swivel	Camou
HK11228	Weedlook lead core gated lead clip leader with swivel+ring	Brown
HK11229	Weedlook lead core gated lead clip leader with swivel+ring	Green
HK11230	Weedlook lead core gated lead clip leader with swivel+ring	Camou
HK11231	Weedlook lead core safety sleeve system with QC swivel	Brown
HK11232	Weedlook lead core safety sleeve system with QC swivel	Green
HK11233	Weedlook lead core safety sleeve system with QC swivel	Camou
HK11234	Weedlook lead core safety sleeve system with swivel+ring	Brown
HK11235	Weedlook lead core safety sleeve system with swivel+ring	Green
HK11236	Weedlook lead core safety sleeve system with swivel+ring	Camou
HK11237	Weedlook lead core safety clip system with QC swivel	Brown
HK11238	Weedlook lead core safety clip system with QC swivel	Green
HK11239	Weedlook lead core safety clip system with QC swivel	Camou
HK11240	Weedlook lead core safety clip system with swivel+ring	Brown
HK11241	Weedlook lead core safety clip system with swivel+ring	Green
HK11242	Weedlook lead core safety clip system with swivel+ring	Camou
HK11243	Weedlook lead core heavy duty clip system with QC swivel	Brown
HK11244	Weedlook lead core heavy duty clip system with QC swivel	Green
HK11245	Weedlook lead core heavy duty clip system with QC swivel	Camou
HK11246	Weedlook lead core heavy duty clip system with swivel+ring	Brown
HK11247	Weedlook lead core heavy duty clip system with swivel+ring	Green
HK11248	Weedlook lead core heavy duty clip system with swivel+ring	Camou

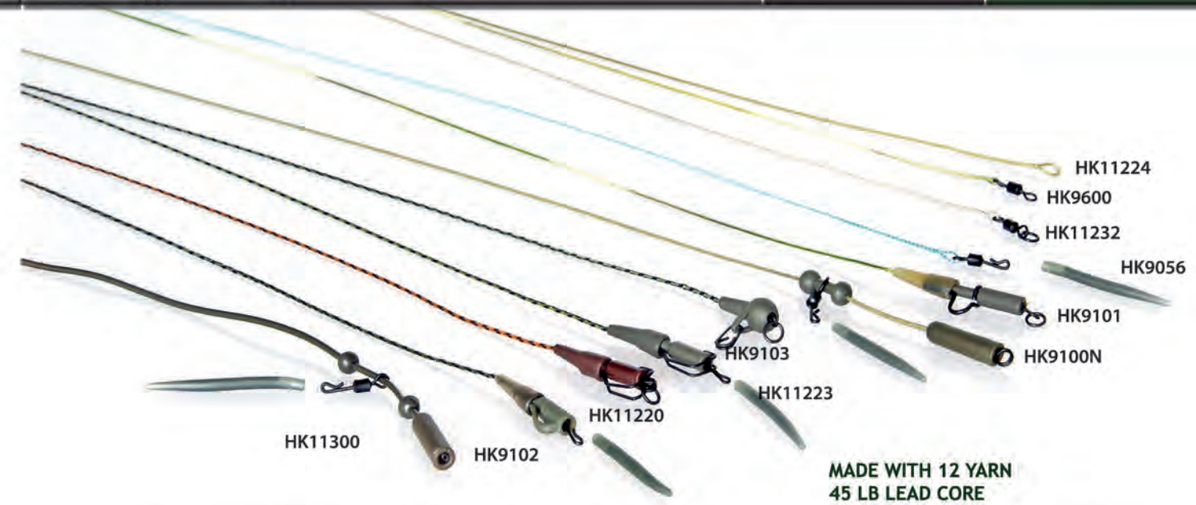

MADE WITH 12 YARN
45 LB LEAD CORE

HELICOPTER RIG SYSTEM
With 40 cm PVC tube, speed link, quick change swivel + ring and an anti-tangle sleeve. Matte Green colour.

HK11300

LEAD CORE CHOD RIG LEADER
With 120 cm Green lead core, a heli-/chod bead, heli-/chod swivel and an anti-tangle sleeve. The main line should be tied directly to this system so that the bead and swivel can easily slide over the knot in case the main line breaks.

HK9100N

LEAD CORE HEAVY DUTY LEADER WITH SWIVEL + RING
With 80 cm Chameleon colour lead core, a heavy duty lead clip and a matching rolling swivel + ring.

HK9101

LEAD CORE SAFETY CLIP LEADER WITH QUICK CHANGE SWIVEL
With 80 cm Classic Camou Green lead core, a safety lead clip with pin, a quick change swivel and an anti-tangle sleeve.

HK9102

LEAD CORE SAFETY SLEEVE LEADER WITH SWIVEL + RING
With 80 cm Classic Camou Green lead core, safety sleeve and swivel + ring UK size 8.

HK9103

LOOPED LEAD CORE WITH QUICK CHANGE SWIVEL
Double looped lead core with Matte Black quick change swivel (#4 - UK size 8). Lengths: 60, 80 and 100 cm. Breaking strength: 45 Lb. Diameter: 0,90 mm. Available in our eight lead core colours.

Item numbers / lengths
HK9056-60 / 60 cm
HK9056-80 / 80 cm
HK9056-100 / 100 cm

LOOPED LEAD CORE WITH SWIVEL
Double looped lead core. Lengths: 60, 80 and 100 cm. Breaking strength: 45 Lb. Diameter: 0,90 mm. Available in our eight lead core colours.

Item numbers / lengths
HK9600-60 / 60 cm
HK9600-80 / 80 cm
HK9600-100 / 100 cm

LOOPED LEAD CORE WITH SWIVEL + RING
Double looped lead core with Matt Black swivel + ring (#4 - UK size 8). Lengths: 60, 80 and 100 cm. Breaking strength: 45 Lb. Diameter: 0,90 mm. Available in our eight lead core colours.

Item numbers / lengths
HK11232-60 / 60 cm
HK11232-80 / 80 cm
HK11232-100 / 100 cm

ULTRAFAST SINKING

DOUBLE LOOPED LEAD CORE
Double looped lead core. Lengths: 60, 80 and 100 cm. Breaking strength: 45 Lb. Diameter: 0,90 mm. Available in our eight lead core colours.

Item numbers / lengths
HK11224-60 / 60 cm
HK11224-80 / 80 cm
HK11224-100 / 100 cm

LEAD CORE GATED LEAD CLIP LEADER WITH SWIVEL + RING
With gated lead clip and swivel + ring UK size 8.

HK11220-80 - 80 cm / Cl. Camou Brown
HK11220-100 - 100 cm / Cl. Camou Brown
HK11221-80 - 80 cm / Cl. Camou Green
HK11221-100 - 100 cm / Cl. Camou Green

LEAD CORE GATED LEAD CLIP LEADER W. QUICK CHANGE SWIVEL
With gated lead clip and swivel + ring UK size 8.

HK11222-80 - 80 cm / Cl. Camou Brown
HK11222-100 - 100 cm / Cl. Camou Brown
HK11223-80 - 80 cm / Cl. Camou Green
HK11223-100 - 100 cm / Cl. Camou Green

Green (A)
Sand (B)
Weed Sport Camou (C)
Chameleon (D)
Sand Spot Camou (E)
Classis Camou Brown (F)
Classic Camou Green (G)
Brown (H)

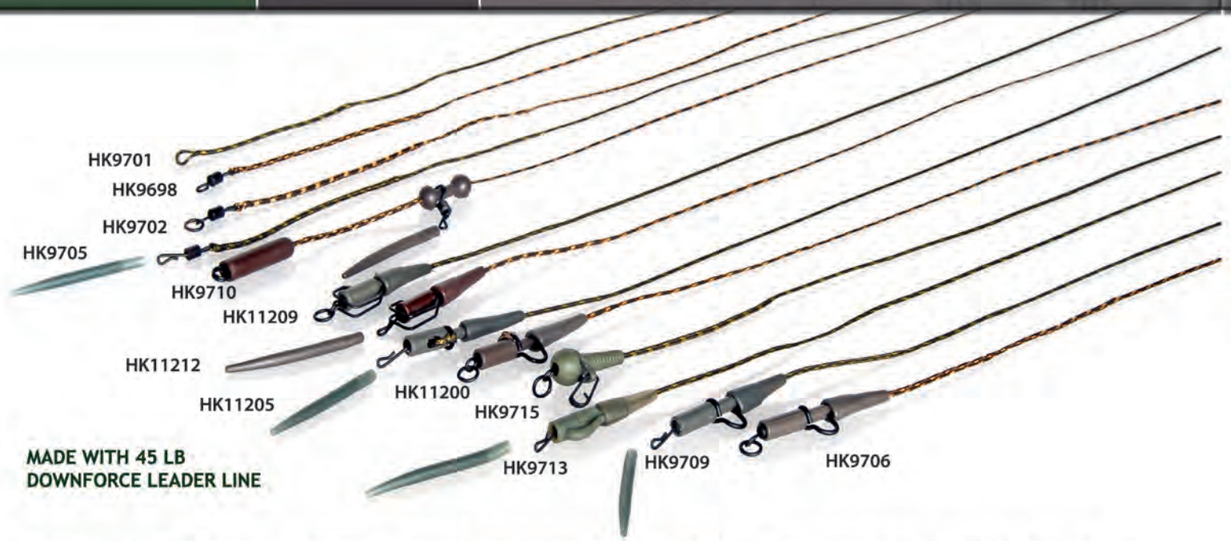

MADE WITH 45 LB DOWNFORCE LEADER LINE

DOWNFORCE LEADER WITH SWIVEL
With rolling swivel UK size 8.

HK9698-80 - 80 cm / Camou Brown
HK9698-100 - 100 cm / Camou Brown
HK9699-80 - 80 cm / Camou Green
HK9699-100 - 100 cm / Camou Green

DOWNFORCE DOUBLE LOOPED LEADER

HK9700-80 - 80 cm / Camou Brown
HK9700-100 - 100 cm / Camou Brown
HK9701-80 - 80 cm / Camou Green
HK9701-100 - 100 cm / Camou Green

DOWNFORCE LEADER WITH SWIVEL + RING
With swivel + ring UK size 8.

HK9702-80 - 80 cm / Camou Brown
HK9702-100 - 100 cm / Camou Brown
HK9703-80 - 80 cm / Camou Green
HK9703-100 - 100 cm / Camou Green

DOWNFORCE LEADER WITH QUICK CHANGE SWIVEL
With quick change swivel UK size 8.

HK9704-80 - 80 cm / Camou Brown
HK9704-100 - 100 cm / Camou Brown
HK9705-80 - 80 cm / Camou Green
HK9705-100 - 100 cm / Camou Green

DOWNFORCE HEAVY DUTY LEADER WITH SWIVEL + RING
With heavy duty lead clip and quick change swivel UK size 8.

HK9706-80 - 80 cm / Camou Brown
HK9706-100 - 100 cm / Camou Brown
HK9707-80 - 80 cm / Camou Green
HK9707-100 - 100 cm / Camou Green

DOWNFORCE HEAVY DUTY LEADER WITH QUICK CHANGE SWIVEL
With heavy duty lead clip and quick change swivel UK size 8.

HK9708-80 - 80 cm / Camou Brown
HK9708-100 - 100 cm / Camou Brown
HK9709-80 - 80 cm / Camou Green
HK9709-100 - 100 cm / Camou Green

DOWNFORCE CHOD RIG LEADER
With heli-/chod bead and heli-/chod swivel UK size 8.

HK9710- 120 cm / Camou Brown
HK9711- 120 cm / Camou Green

DOWNFORCE SAFETY CLIP LEADER WITH QUICK CHANGE SWIVEL
With safety lead clip + pin and quick change swivel UK size 8.

HK9712-80 - 80 cm / Camou Brown
HK9712-100 - 100 cm / Camou Brown
HK9713-80 - 80 cm / Camou Green
HK9713-100 - 100 cm / Camou Green

DOWNFORCE SAFETY SLEEVE LEADER WITH SWIVEL + RING
With safety sleeve with ring and clip plus swivel + ring UK size 8.

HK9714-80 - 80 cm / Camou Brown
HK9714-100 - 100 cm / Camou Brown
HK9715-80 - 80 cm / Camou Green
HK9715-100 - 100 cm / Camou Green

45 LB DOWNFORCE

DOWNFORCE XTRA SAFE LEADER WITH SWIVEL + RING
With XTRA safe lead clip and swivel + ring UK size 8.

HK11200-80 - 80 cm / Camou Brown
HK11200-100 - 100 cm / Camou Brown
HK11201-80 - 80 cm / Camou Green
HK11201-100 - 100 cm / Camou Green

DOWNFORCE XTRA SAFE LEADER WITH QUICK CHANGE SWIVEL
With XTRA safe lead clip and quick change swivel UK size 8.

HK11204-80 - 80 cm / Camou Brown
HK11204-100 - 100 cm / Camou Brown
HK11205-80 - 80 cm / Camou Green
HK11205-100 - 100 cm / Camou Green

DOWNFORCE GATED LEAD CLIP LEADER WITH SWIVEL + RING
With gated lead clip and swivel + ring UK size 8.

HK11208-80 - 80 cm / Camou Brown
HK11208-100 - 100 cm / Camou Brown
HK11209-80 - 80 cm / Camou Green
HK11209-100 - 100 cm / Camou Green

DOWNFORCE GATED LEAD CLIP LEADER WITH QUICK CHANGE SWIVEL
With gated lead clip and quick change swivel UK size 8.

HK11212-80 - 80 cm / Camou Brown
HK11212-100 - 100 cm / Camou Brown
HK11213-80 - 80 cm / Camou Green
HK11213-100 - 100 cm / Camou Green

HELI-/CHOD BEADS

Available in 3 colours: Dark Brown (06), Matte Green (07) and Sand (08).

Item numbers HK9402-

06 07 08

Box 4.

RIG RING STOPS

Item numbers HK9401-

01 03 06 07

Box 3.

HOOK BEAD

Item numbers HK14317-

01 03 06 07

Box 3.

TAPERED BULLET BEADS

Available in 3 colours: Dark Brown (06), Matte Green (07) and Sand (08).

Item numbers HK9541-

06 07 08

Box 4.

TAPERED HOLE BEADS

In Dark Brown (06), Matte Green (07) or Sand (08). Diameter: 6 mm.

Item numbers HK9400-

06 07 08

Blister A.

RUN RINGS + BEAD

Item numbers HK11507-

06 07

Box 4.

TULIP BEADS

Connects swivels and tubes without the use of glue.

Item numbers HK11508

06 07

Box 4.

BULLET BEAD 12 MM

In Dark Brown (06) and Matte Green (07) colour.

Item numbers HK11509-

06 07

Box 3.

BUFFER BEADS

Ideal for sleeving helicopter rigs.

Item numbers	Ø-in / Ø-out
HK11510 - 17 mm	3,0 / 6,0 mm
HK11511 - 25 mm	4,0 / 6,0 mm

06 07

Box 4.

TAPERED BEAD

In Dark brown(06) and Matte Green(07) color.

Item numbers HK14316-

06 07

Box 4.

MULTI BEAD

Available in Clear Transparent(01), Dark Brown(06), Matte Green(07).

HK14318

01 06 07

Box 4.

BAIT BANDS

HK9500

Available sizes:
1,6 x 3,2 mm
3,0 x 5,0 mm
4,0 x 6,0 mm
5,0 x 8,0 mm
7,0 x 12,0 mm

Box 4.

SOFT BEADS

Seven sizes, ranging from Ø 3 mm up to Ø 10 mm.
Box 3 (but Ø 10 mm in Box 4).

Black HK11512-3, 4, 5, 6, 7, 8, 9 or 10
Matte Green HK11513-3, 4, 5, 6, 7, 8, 9 or 10
Dark Brown HK11514-3, 4, 5, 6, 7, 8, 9 or 10

03 06 07

BOILIE JACKET

Protection against crayfish and nuisance fish. Three tubes of 15 cm.

HK11688-S / Ø 15 mm
HK11688-M / Ø 18 mm
HK11688-L / Ø 20 mm
HK11688-XL / Ø 22 mm

Blister E.

SWIVEL BEAD

Available in Clear Transparent(01), Black(03), Dark Brown(06), Matte Green(07).

HK14324

01 03 06 07

Box 4.

SOFT BAND

HK14451

01

TAPERED BEAD

Available in 3 colors: Dark Brown(06), Matte Green(07) and Sand(08).

HK14455

06 07 08

ANTI TANGLE SLEEVE

Available in: Clear Transparent(01), Dark Brown(06), Matte Green(07), Transparent Sand(10), Transparent Mud(11).

HK14450

01 06 07 10 11

LINE ALIGNER SLEEVE

Available in Transparent Brown(13) and Transparent Green(12)

HK14313 Small –For hook size 6 and 8
HK14314 Large- For hook size 2 and 4

12 13

RIG ADAPTOR

Available in Transparent Brown(13) and Transparent Green(12)

HK14260

12 13

WITHY RIG ADAPTOR

Available in Transparent Brown(13) and Transparent Green(12)

HK14258 Small- For hook size 6 and 8
HK14259 Large- For hook size 2 and 4

12 13

RIG ALIGNER SLEEVES

Box 3.

Small - For hooksizes 6 and 8
Large - For hooksizes 2 and 4
Extra Large - For hooksizes 1 and 1/0

Item numbers
HK11680N- (S) / -81N- (L) / -82N- (XL)

01 06 07 10 11

RIG ALIGNER SLEEVES

Box 3.

HK14268 Small-For hooksizes 6 and 8
HK14269 Large-For hooksizes 4 and 2

01 06 07 10 11 12 13

POP-UP RIG ALIGNER SLEEVES

Box 3.

Small - For hooksizes 6 and 8
Large - For hooksizes 2 and 4

Item numbers
HK14196- (S) / -14197- (L)

01 06 07 10 11 12 13

EXTRA LONG ANTI TANGLE SLEEVES

Semi-stiff, extra long anti-tangle sleeves.

Blister A.

Length: 54 mm.

03 12 13

MICRO RIG SLEEVE

Soft, 23 mm rig sleeves.

HK14315

01 06 07 10 11

Box 4.

ANTI TANGLE SLEEVES

Soft, 43 mm long anti-tangle sleeves.

HK11517

01 06 07 10 11

Box 4.

BOILIE STOPS

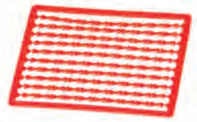

Available in six different colours: Clear Transparent (01), Orange (02), Black (03), Fluo Yellow (04), Red (05) and Dark Brown (06). Soft or hard. 100 pieces on a rack.

Item numbers HARD: HK11500-
Item numbers SOFT: HK11501-

01 02 03 04 05 06

V-SHAPE BOILIE STOPS

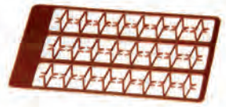

Available in two different colours: Clear Transparent (01) and Dark Brown (06). Three sizes: small, medium and large. 48 pieces on a rack.

Item numbers HK11502-S/M/L-

01 06

HAIR EXTENDER STOPS

Three sizes on a rack of 63. Available in four different colours: White (00), Clear Transparent (01), Dark Brown (06) and Matte Green (07).

Item numbers HK11504-

00 01 06 07

PELLET HOLDERS

Available in seven different colours: Clear Transparent (01), Orange (02), Black (03), Fluo Yellow (04), Red (05), Dark Brown (06) and Matte Green (07). Big and large, subsequently 25 pieces and 67 pieces on a rack.

Item numbers HK11505-S/L-

01 02 03 04 05 06 07

CONTOUR HAIR EXTENDERS

Available in six different colours: Clear Transparent (01), Orange (02), Fluo Yellow (04), Red (05), Dark Brown (06) and Matte Green (07). 2 x 3 pieces on a rack.

Item numbers HK9051-

01 02 04 05 06 07

BOILIE STOPS WITH HOOK

Available in six different colours: Clear Transparent (01), Orange (02), Fluo Yellow (04), Red (05), Dark Brown (06) and Matte Green (07). 20 pieces on a rack.

Item numbers HK9050-

01 02 04 05 06 07

BOILIE STOPS

Available in six different colors: Clear Transparent (01), Orange (02), FluorYellow(04), Red(05), Dark Brown(06) and Matte Green(07).

HK14452

01 02 04 05 06 07

BARBED BOILIE STOPS

Available in seven different colours: Clear Transparent (01), Orange (02), Black (03), Fluo Yellow (04), Red (05), Dark Brown (06) and Matte Green (07). 30 pieces on a rack.

Item numbers HK8212-

01 02 03 04 05 06 07

BOILIE STOPS

Available in six different colors: Clear Transparent (01), Orange (02), FluorYellow(04), Red(05), Dark Brown(06) and Matte Green(07).

HK14452 M
HK14453 L

01 02 04 05 06 07

BOILIE STOPS

New

HK14523

01 04 06 07

BOILIE SPIKES

PVC bag 1.

HK14194 - short-8mm
HK11030 - standard-13mm
HK11031 - extra long-23mm
HK14195 - short with ring-8mm
HK11032 - standard with ring-13mm
HK11033 - extra long with ring-23mm

6 BAIT BANDS WITH HOOK HOLE

Box 4.

With a tiny hole at the side, to attach a boilie or pellet to a hook without the use of a hair.

Item numbers
HK11515-7 - Ø 7 mm
HK11515-10 - Ø 10 mm

R-CLIPS New

HK14517

04 05 06 07

D-CLIPS New

HK14522

03 06 07

LARGE CLIPS New

HK14518

01 02 04 05 06 07

BAIT SCREW

HK14322

01 06 07

QUICK CLIPS New

HK14520

06 07

FAST CLIP

Available in Clear Transparent(01), Dark Brown(06), Matte Green(07).

HK14321

01 06 07

Box 4.

KNOT PROTECTORS

HK9089

06 07

Box 3.

BACK LEAD CLIPS

Item numbers HK11516-

06 07

Blister B.

GATED SAFETY LEAD CLIPS

Available in Dark Brown (06), Matte Green (07) and Sand (08).

Item numbers HK9054-

06 07 08

Box 4.

SAFETY LEAD CLIPS

Available in 7 different colours: Clear Transparent (01), Black (03), Dark Brown (06), Matte Green (07), Sand (08), Transparent Sand (10), Transparent Mud (11).

Box 4.

Item numbers HK11522-

01 03 06 07 08 10 11

SAFETY LEAD CLIPS + PIN

Available in 7 different colours: Clear Transparent (01), Black (03), Dark Brown (06), Matte Green (07), Sand (08), Transparent Sand (10), Transparent Mud (11).

Box 4.

Item numbers HK11523-

01 03 06 07 08 10 11

DISTANCE LEAD CLIPS W/PINS

Available in: Clear Transparent (01), Black (03), Dark Brown (06), Matte Green (07), Sand (08), Transparent Sand (10), Transparent Mud (11).

Item numbers HK14203

Box 4.

01 03 06 07 08 10 11

DISTANCE LEAD CLIPS

Available in: Clear Transparent (01), Black (03), Dark Brown (06), Matte Green (07), Sand (08), Transparent Sand (10), Transparent Mud (11).

Item numbers HK14204

Box 4.

01 03 06 07 08 10 11

SAFETY SLEEVE WITH RING & CLIP

Item numbers HK9057-

06 07

Box 4.

SAFETY LEAD CLIP

Available in Clear Transparent(01), Dark Brown(06), Matte Green(07), Tansparent Sand(10), Transparent Mud(11).

HK14319

Box 4.

01 06 07 10 11

SILICON TUBE

Headercard 1.

Item numbers	Ø-in / Ø-out
HK11660 - Transparent Clear (01)	0,5 / 1,5 mm
HK11661 - Black (03)	0,8 / 1,8 mm
HK11662 - Dark Brown (06)	1,0 / 2,0 mm
HK11663 - Matte Green (07)	1,5 / 2,3 mm
HK11664 - Transparent Sand (10)	2,0 / 3,0 mm
HK11665 - Transparent Mud (11)	2,5 / 3,5 mm

PVC TUBE

Blister Z.

Item numbers	Ø-in / Ø-out
HK11666-01 - Transparent Clear	1,0 / 2,0 mm
HK11666-06 - Dark Brown	
HK11666-07 - Matte Green	
HK11666-10 - Transparent Sand	
HK11666-11 - Transparent Mud	
HK11666-12 - Transparent Light Green	
HK11666-13 - Transparent Brown	

TUNGSTEN PUTTY

For counter balancing pop-up rigs. Available in 5, 10, 15, 20, 25 and 30 gram. Re-usable.

Dark Grey HK11518-5/10/15/20/25 or 30
Dark Green HK11519-5/10/15/20/25 or 30
Dark Brown HK11520-5/10/15/20/25 or 30

XTRA SAFE LEAD CLIPS

Available in: Clear Transparent (01), Black (03), Dark Brown (06), Matte Green (07), Sand (08), Transparent Sand (10), Transparent Mud (11).

Item numbers HK11525-

Box 4.

01 03 06 07 08 10 11

TUNGSTEN TUBE

Blister Z.

Item numbers	Ø-in / Ø-out
HK11667 - Black (03)	0,6 / 1,85 mm
HK11668 - Dark Brown (06)	0,8 / 2,20 mm
HK11669 - Matte Green (07)	

SHRINK TUBE

Box 4.

Item numbers	Ø-in / Ø-out
HK11670 - Transparent Clear (01)	1,0 / 1,2 mm
HK11671 - Black (03)	1,6 / 1,8 mm
HK11672 - Dark Brown (06)	2,0 / 2,2 mm
HK11673 - Matte Green (07)	2,4 / 2,6 mm
HK11674 - Transparent Sand (10)	
HK11675 - Transparent Mud (11)	
HK11676 - Transparent Light Green (12)	
HK11677 - Transparent Brown (13)	

RIG WEIGHTS

Blister B.

Handle can be used as a compact hook puller.

Size: 2.1mm/3.1mm

HK11684 Green 2.1mm
HK11683 Brown 2.1mm
HK14254 Green 3.1mm
HK14255 Brown 3.1mm

HEAVY DUTY LEAD CLIPS

Available in 7 different colours: Clear Transparent (01), Black (03), Dark Brown (06), Matte Green (07), Sand (08), Transparent Sand (10), Transparent Mud (11).

Item numbers HK11524-

Box 4.

01 03 06 07 08 10 11

TAIL RUBBER

Available in Clear Transparent(01), Dark Brown(06), Matte Green(07).

HK14320

01 06 07

Box 4.

TAIL RUBBERS

Available in 7 different colours: Clear Transparent (01), Black (03), Dark Brown (06), Matte Green (07), Sand (08), Transparent Sand (10), Transparent Mud (11).

Item numbers HK11521-

01 03 06 07 08 10 11

Model with tungsten available, Item numbers HK14205

Box 4.

SINKING ANTI-TANGLE TUBE

Item numbers
HK11690 - Light Brown
HK11691 - Light Green

Ø-in / Ø-out
1,0 / 2,0 mm

Blister Z.

MAGGOT CLIPS

Black clips to make maggot rigs. Very sharp and strong. In four sizes.

Item numbers
HK11603-6 - 6 mm
HK11603-8 - 8 mm
HK11603-10 - 10 mm
HK11603-12 - 12 mm

Box 3.

QUICK CHANGE CLIP

Available in sizes 4,6,8 and 10

HK14270

EASY CLIP WITH RING

Available in sizes 4,6,8 and 10

HK14272

Q-RING

HK11600 Box 3.

O-RING

HK14162 MATT BLACK Box 3.

QUICK CHANGE CLIP

Size #1/2/4/6

HK14538 New

QUICK CHANGE CLIP

Size #1/2/4/6

HK14539 New

QUICK CHANGE CLIP

Size #2/4/6

HK14540 New

SPEED LINKS

HK11602-S
HK11602-L

Box 3.

SPEED LINKS

Size #4/6

HK14541 New

T-CHANGE CLIP

Size #4/6

HK14534 New

LOCK-IN SNAPS

Item numbers
HK11601-1 - #1
HK11601-2 - #2
HK11601-3 - #3

Box 3.

OVAL RIG RINGS

For making pop-up, anti-blow out and D-rigs. In a concealing Matte Black colour.

Two sizes available: 4,5 or 6,0 mm.

HK11644 Box 3.

ROUND RIG RINGS

Two sizes available: Ø 3,1 and Ø 3,7 mm.

HK11645 Box 3.

TEAR DROP RIG RING

Size: 4 mm.

HK9052 Box 3.

HELI-/CHOD SWIVEL

Size #2/4/6

HK14537 New

QUICK CHANGE SWIVEL

Size #1/2/4/6

HK14535 New

PVA BAG SWIVEL

Size #4 (UK size 8)
HK9062 Box 3.

QUICK CHANGE SWIVEL

Size #4 (UK size 8)
HK14256 Box 3.

TUBE THREADER

Stainless steel.

HK9090 Headercard 1.

QUICK CHANGE SWIVEL

Size #2/4/6

HK14543 New

CORK SCREW SWIVEL

HK14159
SIZE 4(UK size 8)

HELI-/CHOD SWIVEL

Specially designed for chod rigs.

Size #4 (UK size 8)
HK9061 Box 3.

QUICK LOCK SWIVEL

Size #4 (UK size 8)
HK9058 Box 3.

ROLLING SWIVELS WITH RING

For making, for instance, the Chod rig. The small size is ideal for making a 360 rig. in Matte Black.

Item numbers
HK11642-4 / Size 4 (UK size 8)
HK11642-7 / Size 7

Box 3.

QUICK CHANGE SWIVEL

To be used in combination with an anti-tangle sleeve. In Matte Black.

Size #4 (UK size 8)
HK11640-4 Box 3.

BIG EYE SWIVEL

Size #4 (UK size 8)

HK9059 Box 3.

BIG EYE SWIVEL WITH DIAMOND EYE

Ideal for anti-tangle sleeves.

Size #4 (UK size 8)
HK9060 Box 3.

QUICK CHANGE SWIVEL WITH RING

Ideal for making helicopter rigs with an anti-tangle sleeve. In Matte Black.

Size #4 (UK size 8)
HK11641-4 Box 3.

ROLLING SWIVELS

In three sizes. Available in Matte Black and Black Nickel.

HK11643-5 / Size 5
HK11643-4(8) / Size 4 (UK size 8)
HK11643-3 / Size 3
HK11643-2 / Size 2
HK11643-1 / Size 1
HK11643-1/0 / Size 1/0
HK11643-2/0 / Size 2/0
HK11643-3/0 / Size 3/0

#5 - 1 in Box 3.
#1/0 - 3/0 in Box 4.

"High quality, chemically sharpened, Japanese carp hooks. PTFE coated. Strong, extremely sharp and very corrosion resistant. In a matte, non-reflective finishing."

PTFE coated — Black

Box 3.

HK3304	HK3303	HK3299	HK3300	HK3301	HK3302
CHOD HOOK	TURN DOWN HOOK	ANTI-SNAG HOOK	CLASSIC BOILIE HOOK	D-RIG HOOK	GRIPPER HOOK
# 2, 4, & 6	# 2, 4, 6 & 8	# 1/0, 1, 2, 4, 6 & 8	# 1, 2, 4, 6 & 8	# 1, 2, 4, 6 & 8	# 2, 4, 6 & 8

Also available barbless (except for the sizes 1 and 1/0 of the Anti-snag hook and the size 1 of the D-rig hook).

Double coated (nickel & PTFE) — Green

SHB 1.

HK12000	HK12001	HK12002	HK12003
ANTI-SNAG HOOK	CLASSIC BOILIE HOOK	D-RIG HOOK	GRIPPER HOOK
# 2, 4, 6 & 8	# 2, 4, 6 & 8	# 2, 4, 6 & 8	# 2, 4, 6 & 8

Double coated (nickel & PTFE) — Brown

SHB 1.

HK12006	HK12007	HK12008	HK12009
ANTI-SNAG HOOK	CLASSIC BOILIE HOOK	D-RIG HOOK	GRIPPER HOOK
# 2, 4, 6 & 8	# 2, 4, 6 & 8	# 2, 4, 6 & 8	# 2, 4, 6 & 8

Special hookbox 1

MICRO BARB

PVA HONEY COMB MESH REFILL

PVA Honey Comb Mesh on tube refill.

HK2194 Diameter 25 mm
HK2235 Diameter 37 mm
HK2259 Diameter 44 mm

Blister 2194.

PVA FINE MESH REFILL

Refill for the PVA Fine Mesh on tube.

HK9204 Diameter 18 mm
HK9205 Diameter 25 mm
HK9206 Diameter 37 mm

Blister 9204.

PVA BAGS

PVA bags In seven sizes.

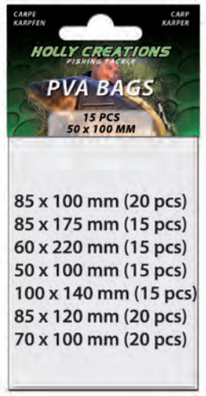

HK2236	85 x 100 mm (20 pcs)
HK2237	85 x 175 mm (15 pcs)
HK2238	60 x 220 mm (15 pcs)
HK2239	50 x 100 mm (15 pcs)
HK2240	100 x 140 mm (15 pcs)
HK2241	85 x 120 mm (20 pcs)
HK2242	70 x 100 mm (20 pcs)

Headercard 1.

PVA MINIATURE BAG

To add a few boilies to the hook. 25 pcs in a bag.

6 x 5 cm

HK2253

Headercard 1.

PVA HONEY COMB MESH ON TUBE

HK2191 - 25 mm
HK2192 - 37 mm
HK2259 - 44 mm

Tube available in clear, blue and green transparent.

FINE MESH PVA ON TUBE

HK9200 - 18 mm
HK9201 - 25 mm
HK9202 - 37 mm

Gun smoke tube with euro-hole cap.

Optional: compress stick inside the tube.

PVA BAG DISPENSER

Dispenser including 20 PVA stringless vest bags of 80 x 105 mm.

HK3124

20 refill bags

HK3124R

PVA STRING (IN GREEN BOX)

To tie boilies to a hook.

HK9208
HK9209

4 yarns / 20 m
6 yarns / 20 m

Blister 9208.

PVA STRING (IN WHITE BOX)

HK2196
HK2197

4 yarns / 20 m
6 yarns / 20 m

Blister 2196.

PVA STRING ON SPOOL

HK2195

2 yarns / 50 m

Blister B.

PVA TAPE

HK8078

10 mm / 5 m

Blister 2196.

BOILIES

Artificial boilies. In two sizes (10 + 14 mm) and five different colours: Bright Red (A), Fluo Pink (B), Fluo Yellow (C), Fluo Green (D) and Fluo Orange (E). All available in pop-up or slow sinking and unflavoured or ready flavoured.

HK11000 - 10 mm / slow sinking
HK11001 - 10 mm / pop-up
HK11002 - 14 mm / slow sinking
HK11003 - 14 mm / pop-up

10 mm in Blister B.
14 mm in Blister A.

PELLETS

Artificial pellets. Dark Brown. In four sizes: (10, 15, 20 and 25 mm). All available in slow sinking and pop-up. Ready flavoured (fish).

HK11006 - slow sinking
HK11007 - pop-up

10 mm in Blister B.
15 mm in Blister A.
20 & 25 mm in Blister J.

MAGGOTS

Artificial maggots (14 mm). Slow sinking. Available in 3 colours: Pearl (G), Yellow (H) and Red (I). Unflavoured or ready flavoured.

HK11010 Box 4.

COMPACT FLIP-TOP BOX WITH ARTIFICIAL BAITS (ASSORTI)

HK11051

CORN STOPS

Boilie stops in the shape of sweetcorn. In eyecatching colours: Bright Red (A), Fluo Pink (B), Fluo Yellow (C), Fluo Green (D), Fluo Orange (E), Natural Yellow (F), Dark Brown (J) and... nite-glow!

HK11050 Blister B.

SWEETCORN

Artificial sweetcorn. Available in five different colours: Bright Red (A), Fluo Pink (B), Fluo Green (D), Fluo Orange (E) and Natural Yellow (F). In pop-up or slow sinking, unflavoured or ready flavoured.

HK11004 - slow sinking
HK11005 - pop-up

Blister B.

TIGER NUTS

Artificial tiger nuts. Natural Brown. In two sizes: medium and large. All available in slow sinking and pop-up. Unflavoured or ready flavoured.

HK11008-M - 15 mm / slow sinking
HK11008-L - 18 mm / slow sinking
HK11009-M - 15 mm / pop-up
HK11009-L - 18 mm / pop-up

Blister A.

CASTERS

Artificial casters (10 mm). Slow sinking. In four colours: Pearl (G), Dark Brown (J), Light Brown (K) and Orange (L). All available in slow sinking and pop-up. Unflavoured or ready flavoured.

HK11011 Box 3.

SOFT MAGGOT

Artificial soft maggots (15 mm). Slow sinking. Available in 4 colours: Pearl (G), Yellow (H), Dark Brown(J), and Red (I). Unflavoured or ready flavoured.
HK14182

NITE-GLOW ARTICICIAL BAITS

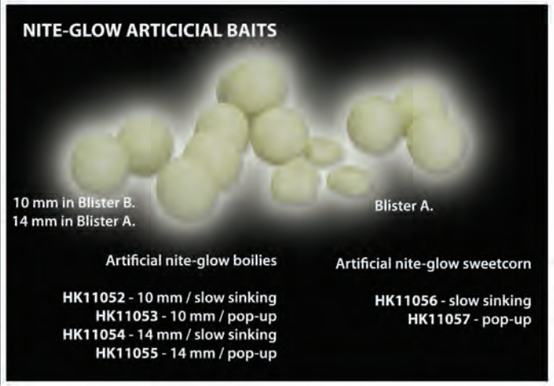

10 mm in Blister B.
14 mm in Blister A.

Blister A.

Artificial nite-glow boilies

HK11052 - 10 mm / slow sinking
HK11053 - 10 mm / pop-up
HK11054 - 14 mm / slow sinking
HK11055 - 14 mm / pop-up

Artificial nite-glow sweetcorn

HK11056 - slow sinking
HK11057 - pop-up

As a professional manufacturer of Carp fishing tackles, we not only supply big and terminal tackles, but also produce various accessories to meet your needs. We have bait banders, needles, pliers, scissors, throwing sticks, boilie rolling tables, bait crushers, bivvy tables and so on, you can select anything you are fond of from our catalog. All the accessories are made from high quality metal and durable plastic, put into dedicated blister or carton box and well protected. Nearly all of them are hot sellers in the market and won good reputation.

BAIT BANDER

HK14160 Blister 3.

BAIT BANDER

Handy tool to put a band on a boilie or pellet. Suitable for several sizes.

HK9093 Blister A.

HK14198 stringer needle
HK14199 fine splicing needle
HK14200 boilie/splicing needle
HK14201 boilie needle

Opp Bag

FISHING PLIER

HK14208 Blister A.

LINE CLIPPER

HK14207 Opp Bag

SCISSORS

HK14209 Blister E.

SCISSORS WITH CORD

HK14210 Opp Bag

BRAID CUTTER DELUXE

HK11800

SKIN LINE STRIPPER

HK2842 Blister E.

KNOT/HOOK TESTER

HK2843 Blister E.

BRAID SCISSORS WITH HOOK SHARPENER

HK3712 Blister 3712.

MAGGOT CLIP PLIERS

HK8214-03/04/05/21 Blister A.

COMBO SKIN LINE STRIPPER

HK8207-03/04/05/21 Blister H.

NEEDLE & DRILL SET

HK4036 Dedicated, heat sealed blister.

MARKER FLOATS

HK1251 - Large Blister 1251.
HK1252 - Medium Blister 1252.

Packed in a dedicated, heat sealed blister. Blister numbers correspond with HK-numbers.

EASY HANDLE HI-VIZ NEEDLES

HK3757 - Stringer needle
HK3734 - Fine splicing needle
HK3735 - Boilie/splicing needle
HK3736 - Boilie needle

HK4036 - Set of all four needles

BOILIE DRIL

HK3760 Blister 3760.

ILLUMINATING MARKER FLOAT (WITH A LIGHT INSIDE)

HK3137 Blister 3137.

BAIT CRUSHER

HK3297- SS (with stainless steel knives)
HK3297- ALU (with aluminum knives)

BOILIE GUN

YW002

NOZZLE FOR BOILIE GUN

HK1005

THROWING STICK

HK2097C - 20 MM
HK2098C - 24 MM

ALUMINUM THROWING STICK

Available in 22, 25 & 28 mm.

HK3296

THROWING SPOON WITH 180 CM FIBERGLASS POLE WITH EVA HANDLE

HK0441-180

THROWING SPOON WITH 85 CM FIBERGLASS POLE WITH EVA HANDLE

HK0441-85

One piece construction: no mould split on rolling surface area.

BOILIE ROLLING TABLES

HK2590 - for Ø 16 mm boilies
HK2591 - for Ø 18 mm boilies
HK2592 - for Ø 20 mm boilies
HK2593 - for Ø 22 mm boilies
HK2594 - for Ø 24 mm boilies
HK2603 - for Ø 28 mm boilies
HK2604 - for Ø 32 mm boilies

SCOOP

HK14381

THROWING SPOON

Reinforced.

HK8211

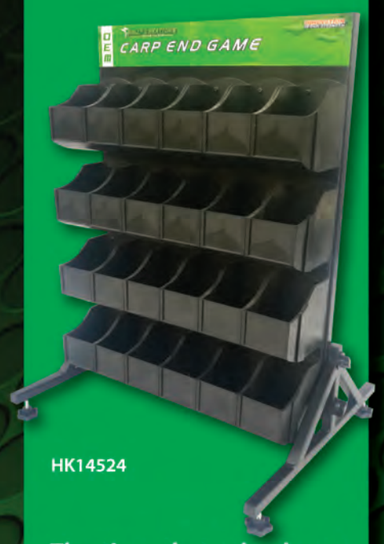

HK14524

The time that a lead was just a lead has long gone. More and more anglers realize that the shape of a lead can help cast further, hold bottom better and even increase hooking chances. Consealing colours or camouflage coatings can help fool even the smartest carp. We gave them all, in a wide range of weights... And, of course, in very high quality!

Tapered box lead

HK3257 DUNG OR GRAVEL

OZ	1.1	1.5	2	2.5	3	3.5	4	5	6	8
GR.	30	43	57	71	85	99	113	142	170	227

Distance lead

HK3258 DUNG OR GRAVEL

OZ	1.5	2	2.5	3	3.5	4	5
GR.	43	57	71	85	99	113	142

Flat sided pear lead

HK3259 DUNG OR GRAVEL

OZ	1.5	2	2.5	3	3.5	4	5
GR.	43	57	71	85	99	113	142

Tapered flat pear lead

HK3260 DUNG OR GRAVEL

OZ	1.1	1.5	2	2.5	3	3.5	4	5	6	8
GR.	30	43	57	71	85	99	113	142	170	227

High grip lead

HK3261 DUNG OR GRAVEL

OZ	1.1	1.5	2	2.5	3	3.5	4	5	6	8
GR.	30	43	57	71	85	99	113	142	170	227

Flat side distance lead

HK3262 DUNG OR GRAVEL

OZ	1.1	1.5	2	2.5	3	3.5	4	5
GR.	30	43	57	71	85	99	113	142

Inline tapered box lead

HK3263 DUNG OR GRAVEL

OZ	1.5	2	2.5	3	3.5	4	5
GR.	43	57	71	85	99	113	142

Inline tapered flat pear lead

HK3264 DUNG OR GRAVEL

OZ	1.5	2	2.5	3	3.5	4	5
GR.	43	57	71	85	99	113	142

Tapered box lead

HK3257 NEW GREEN

OZ	1.1	1.5	2	2.5	3	3.5	4	5	6	8
GR.	30	43	57	71	85	99	113	142	170	227

Tapered box lead

HK3257 NEW BROWN

OZ	1.1	1.5	2	2.5	3	3.5	4	5	6	8
GR.	30	43	57	71	85	99	113	142	170	227

Distance lead

HK3258 NEW GREEN

OZ	1.5	2	2.5	3	3.5	4	5
GR.	43	57	71	85	99	113	142

Distance lead

HK3258 NEW BROWN

OZ	1.5	2	2.5	3	3.5	4	5
GR.	43	57	71	85	99	113	142

Flat sided pear lead

HK3259 NEW GREEN

OZ	1.1	1.5	2	2.5	3	3.5	4	5
GR.	30	43	57	71	85	99	113	142

Flat sided pear lead

HK3259 NEW BROWN

OZ	1.1	1.5	2	2.5	3	3.5	4	5
GR.	30	43	57	71	85	99	113	142

Tapered flat pear lead

HK3260 NEW GREEN

OZ	1.1	1.5	2	2.5	3	3.5	4	5	6	8
GR.	30	43	57	71	85	99	113	142	170	227

Tapered flat pear lead

HK3260 NEW BROWN

OZ	1.1	1.5	2	2.5	3	3.5	4	5	6	8
GR.	30	43	57	71	85	99	113	142	170	227

High grip lead

HK3261 NEW GREEN

OZ	1.1	1.5	2	2.5	3	3.5	4	5	6	8
GR.	30	43	57	71	85	99	113	142	170	227

High grip lead

HK3261 NEW BROWN

OZ	1.1	1.5	2	2.5	3	3.5	4	5	6	8
GR.	30	43	57	71	85	99	113	142	170	227

Flat side distance lead

HK3262 NEW GREEN

OZ	1.1	1.5	2	2.5	3	3.5	4	5
GR.	30	43	57	71	85	99	113	142

Flat side distance lead

HK3262 NEW BROWN

OZ	1.1	1.5	2	2.5	3	3.5	4	5
GR.	30	43	57	71	85	99	113	142

Inline tapered flat pear lead

HK3264 NEW GREEN

OZ	1.5	2	2.5	3	3.5	4	5
GR.	43	57	71	85	99	113	142

Inline tapered flat pear lead

HK3264 NEW BROWN

OZ	1.5	2	2.5	3	3.5	4	5
GR.	43	57	71	85	99	113	142

Tip Lead

DG218/219

OZ										
GR.	20	40	80							

Long box inline lead

HK3142

OZ	3	3.5	4	5
GR.	85	99	113	142

Inline rounded flat pear lead

HK3143

OZ	3	3.5	4	5
GR.	85	99	113	142

Rounded flat pear lead

HK3151

OZ	1.5	2	2.5	3	3.5	4	5	6
GR.	43	57	71	85	99	113	142	170

Flat pear lead

OTFP

OZ	1.1	1.5	2	2.5	3	3.5	4	5
GR.	30	43	57	71	85	99	113	142

Inline flat pear lead

OTFIP

OZ	1.1	1.5	2	2.5	3	3.5	4	5
GR.	30	43	57	71	85	99	113	142

Inline round box lead

HK3140

OZ	3	3.5	4	5
GR.	85	99	113	142

Back lead with cord

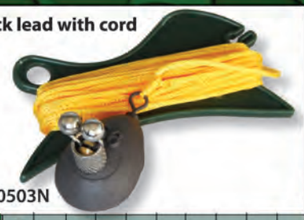

HK0503N

OZ	2
GR.	56

Back lead with cord

HK0503

OZ	2
GR.	56

Inline round high grip lead

HK3141

OZ	3	3.5	4	5
GR.	85	99	113	142

Inline tapered flat pear lead

HK3264 GREEN OR BROWN

OZ	1.5	2	2.5	3	3.5	4	5
GR.	43	57	71	85	99	113	142

Distance lead

HK3258 GREEN OR BROWN

OZ	1.5	2	2.5	3	3.5	4	5
GR.	43	57	71	85	99	113	142

Flat sided pear lead

HK3259 GREEN OR BROWN

OZ	1.1	1.5	2	2.5	3	3.5	4	5
GR.	30	43	57	71	85	99	113	142

Tapered flat pear lead

HK3260 GREEN OR BROWN

OZ	1.1	1.5	2	2.5	3	3.5	4	5	6	8
GR.	30	43	57	71	85	99	113	142	170	227

High grip lead

HK3261 GREEN OR BROWN

OZ	1.1	1.5	2	2.5	3	3.5	4	5	6	8
GR.	30	43	57	71	85	99	113	142	170	227

Flat side distance lead

HK3262 GREEN OR BROWN

OZ	1.1	1.5	2	2.5	3	3.5	4	5
GR.	30	43	57	71	85	99	113	142

Catfish rig with sinle hook + treble

With a 30 gram float, single hook #6/0 and treble #4/0. Length: 175 cm.

New

HK14526 — Blister 4.

Catfish rig with single hook

With a float. In three sizes:
single hook #4/0 + submerger float 30 gram.
Length: 150 cm.

New

HK14527 — Blister 4.

Catfish live bait rig with two trebles

With one single hook and two trebles. Two sizes available:
with single hook #6/0 + two trebles #4/0 or
Length: 135 cm.

New

HK14528 — Blister 4.

Catfish live bait rig with one treble

With one single hook and one treble. Two sizes available:
with single hook #6/0 + treble #4/0 or
Length: 135 cm.

New

HK14529 — Blister 4.

CATFISH READY RIG

HK12530

New

HOOK SIZE 4-12kg/7.5cm
HOOK SIZE 6-8kg/9cm
Blister J.

CATFISH READY RIG

HK12533

New

HOOK SIZE 6-5.5cm
HOOK SIZE 4-7.5cm
Blister J.

CATFISH READY RIG

HK12532

New

Blister J.

LEADERS

HK12525

New

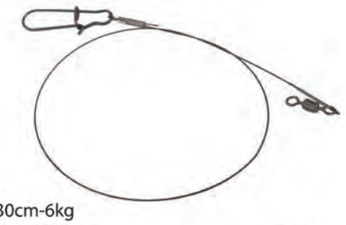

30cm-6kg
40cm-9kg
Blister J.

LEADERS

HK12531

New

0.6mm/30cm
0.8mm/40cm
Blister J.

INNOVATION IS OUR STRENGTH HOLLY CREATIONS FISHING TACKLE RIGS CATFISH

The used catfish hooks and trebles are PTFE coated. But we can also make the rigs with our black nickel hooks and trebles (except for the two rigs that require a circle hook).

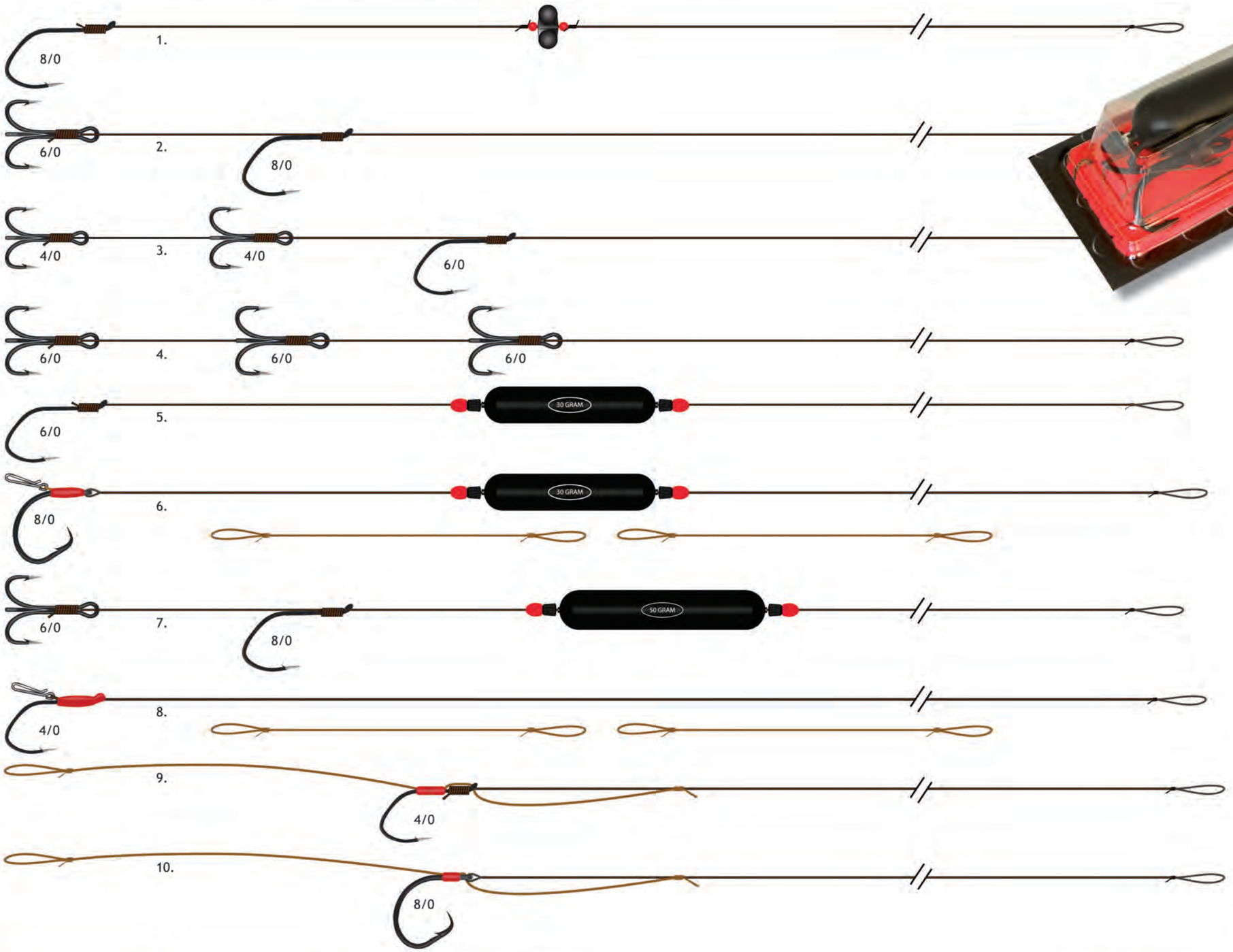

All our catfish rigs are tied with our 0,80 mm, 225 Lb Catfish kevlar.

1. Catfish live bait/eel rig
With single hook #4/0, #6/0, #8/0 or #10/0 and a Rotating catfish rattler. Length: 100 cm. HK9999

2. Catfish live bait rig with one treble
With one single hook and one treble. Two sizes available:
with single hook #6/0 + treble #4/0 or
with single hook #8/0 + treble #6/0.
Length: 125 cm. HK9998

3. Catfish live bait rig with two trebles
With one single hook and two trebles. Two sizes available:
with single hook #6/0 + two trebles #4/0 or
with single hook #8/0 + two trebles #6/0.
Length: 135 cm. HK9997

4. Catfish live bait rig with three trebles
With three trebles #4/0. Length: 145 cm. HK9996

5. Catfish submerger rig with single hook
With a submerger float. In three sizes:
single hook #4/0 + submerger float 30 gram,
single hook #6/0 + submerger float 30 gram,
single hook #8/0 + submerger float 50 gram.
Length: 150 cm.
HK9995

6. Catfish submerger rig with circle hook
With a 50 gram submerger float, circle hook #8/0 and two double looped hairs. Length: 150 cm. HK9994

7. Catfish submerger rig with sinle hook + treble
With a 30 gram submerger float, single hook #6/0 and treble #4/0. Length: 175 cm. HK9993

8. Catfish pellet rig
With single hook #4/0 and two 20 cm double looped hairs. Length: 120 cm. HK9992

9. Catfish adjustable pellet rig
Pellet rig with adjustable hair and single hook #4/0. Length: 120 cm. HK9991

10. Catfish adjustable pellet rig with circle hook
With circle hook #8/0. Length: 120 cm. HK9990

We develop this range for starter of Catfish, all rigs are based on standard settings, i.e, eco braided lines, floats and hooks, and packaging il OPP bag with headercard.

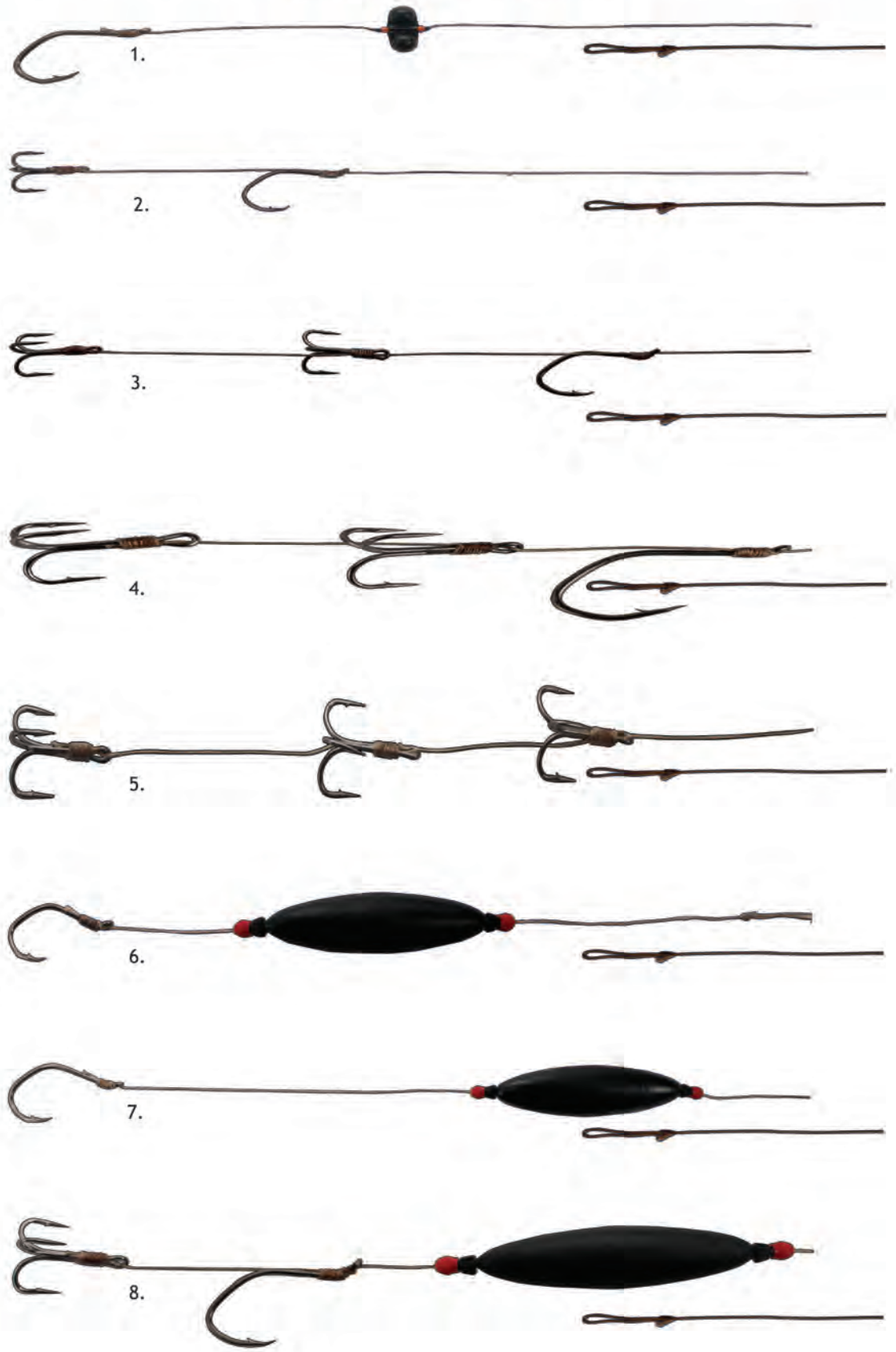

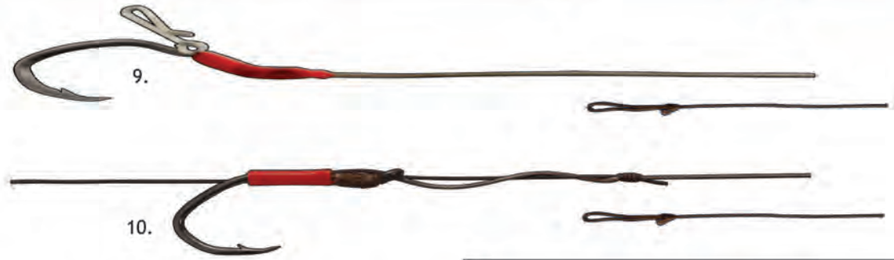

1. Catfish live bait/eel rig
With single hook #4/0, #6/0, #8/0 or #10/0 and a Rotating catfish rattler. Length: 100 cm. HK14083

2. Catfish live bait rig with one treble
With one single hook and one treble. Two sizes available:
with single hook #6/0 + treble #4/0 or
with single hook #8/0 + treble #6/0.
Length: 125 cm. HK14084

3. Catfish live bait rig with two trebles
With one single hook and two trebles. Two sizes available:
with single hook #6/0 + two trebles #4/0.
Length: 135 cm. HK14085

4. Catfish live bait rig with two trebles
With one single hook and two trebles. Two sizes available:
with single hook #6/0 + two trebles #4/0 or
with single hook #8/0 + two trebles #6/0.
Length: 135 cm. HK14086

5. Catfish live bait rig with three trebles
With three trebles #4/0. Length: 145 cm. HK14087

6. Catfish rig with single hook
With a float. In three sizes:
single hook #4/0 + submerger float 30 gram.
Length: 150 cm.
HK14088

7. Catfish rig with single hook
With a float. In three sizes:
single hook #8/0 + submerger float 50 gram.
Length: 150 cm.
HK14089

8. Catfish rig with sinle hook + treble
With a 30 gram float, single hook #6/0 and treble #4/0. Length: 175 cm. HK14090

9. Catfish pellet rig
With single hook #4/0 and two 20 cm double looped hairs.
Length: 120 cm. HK14091

10. Catfish adjustable pellet rig
Pellet rig with adjustable hair and single hook #4/0.
Length: 120 cm. HK14092

CATFISH BRAIDED LINE

Braided line in the diameters 0,80
HK14105
Spool 3 in Blister X

CATFISH FLOATS

HK14102-20g
HK14103-30g
HK14104-50g
Oppbag

CATFISH TREBLE BLACK NICKEL

HK14093-size2
HK14094-size4
HK14095-size6
HK14096-size8
HK14097-size2/0
HK14098-size3/0
HK14099-size4/0
HK140100-size5/0
HK140101-size6/0

CATFISH SINGLE HOOK BLACK NICKEL

HK14163-size2/0
HK14164-size4/0
HK14165-size6/0
HK14166-size8/0
HK14167-size10/0
HK14168-size12/0

CRANE SWIVELS

Black PTFE coated

HK9968 - 100/175/225 Lb Blister B.

BALL BEARING SWIVELS

Black PTFE coated

HK9899- 100/175/225 Lb Blister A.

CRANE SWIVELS WITH COASTLOCK SNAP

Black PTFE coated

HK9967 - 100/175/225 Lb Blister A.

BALL BEARING SWIVELS WITH EXTREME SAFETY SNAP

HK9969 - 90/150 Lb Blister A.

HEAVY DUTY BALL BEARING SWIVELS (SILVER)

With two, stainless steel rings.

HK8216 - 65/100/200 Kg Blister B.

BALL BEARING SWIVELS WITH COASTLOCK SNAP

Black PTFE coated

HK9965 - 100/175/225 Lb Blister A.

CRANE SWIVELS WITH FASTLOCK SNAP

Black PTFE coated

HK9966 - 100/175/225 Lb Blister A.

CATFISH MONOFILAMENT LEADER LINE

Supple, low memory monofilament for tying catfish rigs. Available in the diameters 0,80 mm (75 Lb) 1,00 mm (110 Lb) and 1,20 mm (175 Lb). 45 meter on a spool.

HK9976 Spool 5 in a PET Blisterbox.

BALL BEARING SWIVEL (SILVER)

With two, stainless steel rings.

HK9898 - 90 Lb Blister B.

BALL BEARING SWIVELS WITH CROSS LOCK SNAP (SILVER)

HK9897 - 90 Lb Blister B.

ROLLING SWIVEL WITH CROSS LOCK SNAP (SILVER)

HK4714 - 90/150/175 Lb Blister B.

FAST LOCK SNAP (SILVER)

HK9896 - 50 Lb Blister B.

HAND MADE, ONE-PIECE WOODEN CLONK

Polybag/headercard or dedicated blister.

HK4013

Classic clonk cut out of one-piece wood. Several layers of lacquer have been applied. This is not just "a" clonk, this is more like a piece of art, a musical instrument. It's a combination of strength and elegance.

KEVLAR

Braided kevlar line in the diameters 0,65 / 0,80 / 1,00 and 1,50 mm.

HK9977 Spool 3 in Blister X.

REMOVABLE LEAD BOOM

HK8213 Blister A.

LIVE BAIT RETAINER

HK9964 Blister A.

SUPER STOPPER

Float/lead stopper for thick lines (like catfish kevlar hooklink). Re-usable. Two sizes available: L (for lines up to 1,00 mm) and XL (for lines up to 1,85 mm).

HK9975 Box 4.

PROPELOR CATFISH RATTLERS

In the colours: Black, Fluorescent White, Fluo Yellow, Fluo Orange, Chrome.

HK8454 Blister A.

KEVLAR SAFETY GLOVES

HK13000 - left hand
HK13001 - right hand

BUOY MARKER WITH OVERSIZED CLIP

HK9970N

KNOT PULLER

HK8208-10 (diameter: 10 mm)
HK8208-13 (diameter: 13 mm)

FLOAT WITH TWO RATTLERS

60/80gram
HK14332

FLOAT WITH FOUR RATTLERS

60/80gram
HK14333

SUBMERGER FLOATS

HK9972N - 30/50 gram. Blister 4.

Mono Crimp Curve Adapters

New

HK14521

CATFISH STRETCHER DELUXE

Catfish stretcher to move, weigh or even land catfish up to 100 kg. The quick dry rubber mesh releases scooped up water instantly and helped reduce the overall weight. Eight foam floats (with reflective straps) make the stretcher float and highly visible in the dark. The two 2-piece fiberglass poles will keep the stretcher in shape, which is very fish friendly and safe. The loops of the weigh cord go over the rubber handles.

245 x 75 cm

Weigh cord included.

HK9504

CATFISH WEIGH SLING STANDARD

Net in small mesh, closed by 4 plastic buckles, comes in a dedicated sleeve.

212 x 128 x 70 cm

HK1093

Optional: reflective tag on the cord.

QUICK DRY CATFISH WEIGH SLING

Rubber net, supported by two fiberglass poles, comes in a sleeve.

111 x 41 x 42 cm

HK1247

With experience in fishing luggage production for about 20years, we have a range of high-end match luggage for your selection. Genuine quality fabric in higher than 600D with different color for your choice, heavy duty plastic and metal buckles, strengthened PVC material for protection of luggage bottom, consistent colored and high density straps, professional sewing technics,
We can make your Match luggage unique and popular in the market.

AND MUCH, MUCH MORE...

4 ROD HOLDALL
600D PVC coated material

HK14548
24x24x190 cm

HK14549
24x24x160 cm

New

HK14335
FOLDABLE FEEDERALL 2-PART

600D PVC coated material, water-resistant, fully padded, 2-part, hard-board PE in back, rubber coated on bottom, padded shoulder straps
Easy to roll up and portable

175x30x17cm

HK3411
DOUBLE-SIDE DELUXE POLE HOLDALL

600D PVC coated jacquard material, water resistant, fully padded, rubber coated bottom, umbrella and bankstick bag on side, padded divider, padded shoulder straps and handle.

185 x 30 x 15cm

HK3409
STANDARD POLE HOLDALL

600D PVC coated jacquard material, water resistant, rubber bottom, umbrella and bankstick bag on the front side.

180 x 25 cm.

HK14457
POLE-PROTECTOR BAG

600D PVC coated material, water-resistant, fully padded
For dedicated protection of poles
Foam padded on top cover
For six poles

LARGE BAIT BAG
HK14552
64x35x30 cm

New

BAIT BAG
HK14550
49x43x25 cm

New

DELUXE KEEPNET BAG
HK3421 60 x 50 x 8 cm
HK3422 60 x 50 x 16 cm DOUBLE

MATCH SYSTEM CARRYALL
52 x 45 x 45 cm
HK3425

DELUXE KEEPNET BAG
HK3423 55 x 8 cm
HK3424 55 x 16 cm DOUBLE

CARRYALL
HK14553
42x62x40 cm

New

LARGE AEECSSORY BAG
New
HK14551
70x57x18 cm

MEDIUM AEECSSORY BAG
New
HK14546
42X42X24 cm

SMALL BAIT BAG
New
HK14545
28x42x30 cm

EVA SQUARE BAG
New
HK14547
23x37x22 cm

MATCH SYSTEM COOLING BAG
HK8452
30 x 25 x 20 cm

MATCH SYSTEM SHORT BAG
HK3430
30 x 25 x 10 cm

EVA CARRY BAG
HK14569 L 41x28x34 cm
HK14570 M 38x28.5x26 cm
HK14571 S 36x24x23 cm

New

EVA BAIT BOWL SET
HK14557 Ø40x13 cm

New

3PCS EVA BOWL SET
HK14563
Ø18x7 cm X1
Ø21x7.5 cm X1
Ø24x8 cm X1

New

5PCS EVA TRAY SET
HK14562
13x9x8 cm X3
33x10.5x8 cm X1
36x25.5x9 cm X1

New

5PCS EVA TRAY SET
HK14561
13x9x8 cm X2
21x14.5x9 cm X1
24x15.5x9.5 cm X1
27x17x10 cm X1

New

3 PCS EVA TRAY SET
HK14560
16.5x10x7 cm X1
21x14.5x7.5 cm X1
27x17x8 cm X1

New

5PCS EVA ACCESSORY SET
HK14564
13x9x8 cm X3
33x10.5x8 cm X1
36x23x9 cm X1

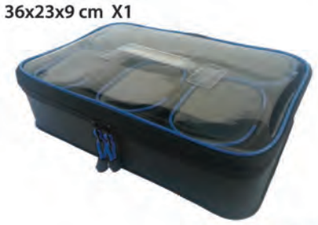

New

EVA ACCESSORY BAG
HK14565 S 21x14.5x8 cm
HK14566 M 24x15.5x9 cm
HK14567 L 27x17x10 cm

New

EVA ACCESSORY CASE
HK14554 S 16x11x9 cm
HK14555 M 25x13x9.5 cm
HK14556 L 28x13x10 cm

New

EVA SQUARE BAG
HK14439 S 20X20X20CM
HK14440 M 22X22X25CM
HK14441 L 24X24X28CM

New

EVA BAIT WET BOX
HK14558 20x20x10 cm

New

EVA WATER BUCKET
HK14568 22x22x20 cm

New

UMBRELLA FLAT BACK

210D PU coated material.
With 6mm fiberglass ribs. 2.5m with handy tilt system

HK14336

ELITE POLE SHIPPER UMBRELLA

210D PU coated material, two zipped holes to put a fishing pole through, one long and fat part for easy casting. 2,50 m.

HK3206-Nubrolly only
HK4095-With Handy tilt system (incl. nubrolly)

BAIT UMBRELLA

HK2994
210D PU coated material, 1.50m.

SUMMER UMBRELLA

HK3207

190D PA waterproof material waterproof, 1000 mesh on one side (that can be covered again and closed with a clip), fully coated iron frame, two screw twist locks.

BOX CHAIR

HK14577

New

FEEDER CHAIR

HK14574

New

Telescopic legs are optional

ELITE SEATBOX

HK11024

Dimensions: 52x54x66cm

FEEDER CHAIR WITH PLATFORM

HK14533

New

Telescopic legs are optional

INNOVATION IS OUR STRENGTH
HOLLY CREATIONS FISHING TACKLE
ACCESSORIES
MATCH FEEDER

Groundbait bowl with cover and seat box holder

HK2991

Bait bowl with seat box holder

HK2990

Big bait bowl with seat box holder

HK3033

Pole catcher

HK2229

Available in
20, 25 & 38 cm.

HK3020

Keepnet connector

Available in
25, 35 & 45 cm.

HK2984

Adjustable 90° arm

HK2983

Rubber rod holder

Available in
20, 25, 30, 35 & 40 cm.

HK3026

Keepnet arm

Available in
22, 27, 35 & 45 cm.

HK2989

Adjustable bracket with standard thread

FEEDER REST

HK3211 - plastic/EVA

Plastic side tray

HK3034 42 x 38 cm

METAL MESH TRAY

New

HK14573

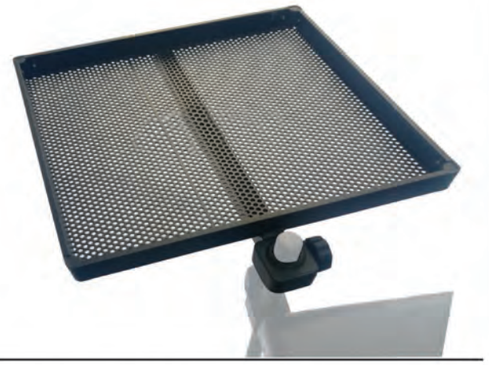

Bucket 25 liter with bowl and cover

HK1110

ROD-REST POD

HK14572

New

FEEDER ARM

HK14341

Square riddle 17x17cm

HK0358

Deluxe BAIT BOX
HK14583 S 172x50MM
HK14584 M 172x65MM
HK14585 L 172x90MM

New

ECO BAIT BOX
HK14586 S 135x50MM
HK14587 M 170x70MM
HK14588 L 170x100MM

New

LEAD PLIER
HK14475

Round riddle
Available in dia 33cm,33.5cm,36cm

HK0256

Weigh clocks

HK1073 - 25 kg
HK1074 - 50 kg
HK1075 - 100 kg

Grip handle digital scale

Available in 20 & 40 kg.
HK3488

Digital catfish scale 150 kg

HK3363

Hook length wallet

In 15, 20, 25, 30, 35, 40, 45 and 50 cm.

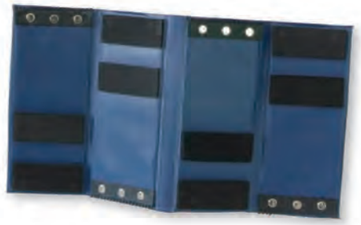

HK0644

Triangle groundbait mixer

HK14590 New

Digital scale 25kg

HK1059

BAITFORMER

Gram 15g/24g/32g/40g/60g
HK14169 HK14170

PLASTIC FEEDER BASCKET

Gram 43g/57g/71g/85g/99g/113g

HK14172

PLASTIC FEEDER BASCKET

Gram 43g/57g/71g/85g/99g/113g
HK14171

IMPACT BOMB

Gram 19g/43g
HK14463 New

METHOD MOULD S
HK14578

Method zinc feeder
Gram 20g/30g
HK14579 HK14580 New

PLASTIC FEEDER BASCKET

Gram 43g/57g/71g/85g/99g/113g

HK14173

FEEDER CAGE

With high quality casting and plastic mold, durable fluorocarbon line,
Gram 15g/20g/30g/40g
HK14338

SQUARE LEAD

Gram 15g/20g/40g
HK14464 New

METHOD MOULD

HK14461
HK14460 FLURO

METHOD FEEDER

Feeder in new coating
HK14458 S
HK14459 L

DISTANCE LEAD

Gram 15g/20g/40g
HK14462 New

FLAT SIDE LEAD

Gram 30g/43g
HK14465 New

At the beginning we made fishing gear, there was already bushes, connectors, disgorgers and catapults in our range. Now we come back to this range of accessories, with new material and process to give big surprise to you.

PTFE BUSH
HK14476

Size: 1.3mm,1.5mm,1.6mm, 1.7mm,2.3mm,2.7mm, 3.2mm,3.6mm

PTFE BUSH
HK14477

Size: 3.2mm,4.3mm,5.2mm

PTFE Bush, the material with characteristics erosion-resisting and durable, we supply two models now with different colors.

DACRON CONNECTOR
HK14478

Size: 5mm, 6.5mm, 8mm
2 Tonnectors per Tube
Dacron Connector, with TPR material mixed in, it's not so hard but still keep a reasonable stiffness, also supplied in different colors.

DISGORGER L
HK14479

Disgorger, nice smooth finishing, with floating function, will be an ideal tool for you.

RAPID STOPS L
HK14468 S
HK14467 L

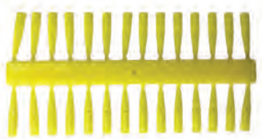

01 02 04

Powergum pole winder anchor
10 pcs in polybag with header card.

HK1228

Latex pole winder anchor

10 pcs in polybag with header card.

HK1227

STOPPER
HK14472

STOPPER
HK14473

Power gum

HK8189 Blister X

MICRO HOOK RING SWIVEL
HK14469

MICRO SWIVEL
HK14470

FEEDER SWIVEL
HK14022

MICRO CLIP
HK14471

FEEDER SWIVLE WITH RING

HK14023

STICK WAGGLER ADAPTOR

HK8186

FEEDER-&MATCH QUICK CHANGE SWIVEL

Sizes: 18/10
HK8178

SNAL SWIVEL

HK14081

SIC SLIDING WAGGLER ADAPTOR

Sizes: 10/12/14
HK8149

FIXED WAGGLER ADAPTOR

HK8147

TEFCON SLIDLING WAGGLE

Sizes: 10/12/14
HK8146

EASY SWAP SWIVEL

HK14082

SPECIALIST FEEDER RIG I

HK14017

SPECIALIST FEEDER RIG II

HK14018

FEEDER RIG FREE RUN SWIVEL

HK14019

FEEDER RIG TWISTED LINE

HK14020

FEEDER RIG TWO STOPPER

HK14021

MATCH RIG SET
New
HK14466
HK14481

Smoker

HK14347

Smoker

HK14348-Smoker S
HK14349-Smoker M

COOKING SET
HK14490

CAP LIGHT
HK14596
New

Camping light
HK14331
New

Camping lamp with fan
HK3099
New

Cooking pan
HK14359
New

Rod bands (neoprene)
HK0580

Apron full size
HK3485

H-marker
HK2134

Mini marker
HK14360

INNOVATION IS OUR STRENGTH HOLLY CREATIONS FISHING TACKLE TACKLE & OUTDOOR VARIOUS

CAMOU Waterproof bag

New

HK14597
30x13x41 cm 15L

Waterproof bag

New

HK14598
30x15x50cm 15L 20L

Waterproof bag

New

HK14599
32x18x66 cm 30L

Waterproof SACK

New

HK14560
25x25x65 cm 20L 30L 40L

Waterproof carrybag L

HK14362
70x30x30cm
New

Waterproof phone bag

HK14355
New

Plastic seatbox
HK3505
38 x 26 x 38 cm

Plastic seatbox
HK1416
53 x 37 x 40 cm

HK3288
Side tray for the HK1416 seatbox

Hoodie with zipper
HK14601

Hoodie without zipper
HK14605

Vest
HK14611

Softshell jecket
HK14610

Pant
HK14607

On these page you will find the most common packagings that we use: blisters, plastic boxes, PVC bags, spools, a headercard, a hang tag for banksticks and our carp rigs OPP bags. Not included are our socalled "dedicated blisters" (which are often heat sealed), because these are only suitable for one specific product. The artwork templates for the labels or insertcards can be found in the "VIP lounge" on our website: www.holly-creations.com. (The VIP lounge section is password protected and only accessable by our costumers).

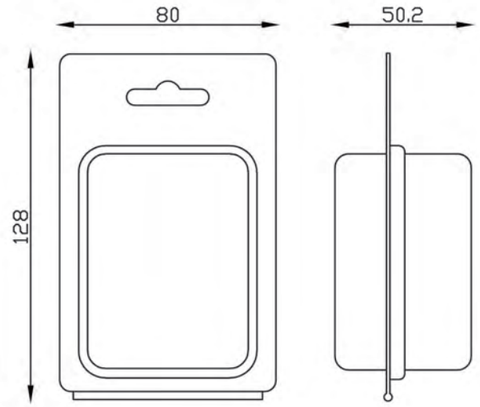

Blister 2

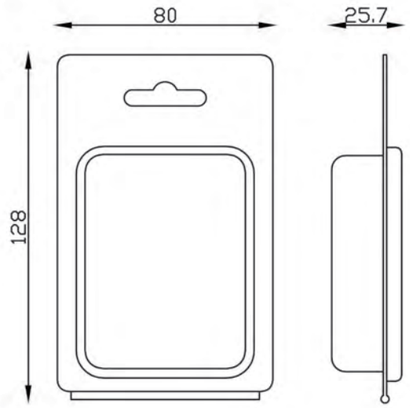

Blister 3

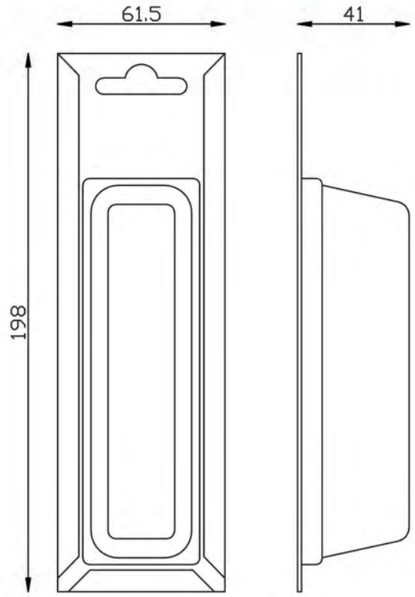

Blister 4 (with foam bed)

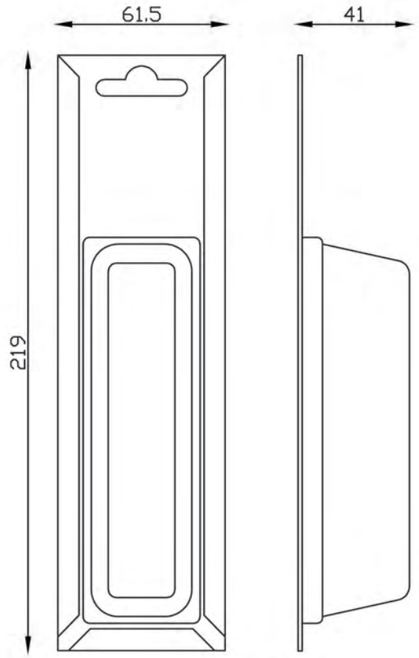

Blister 5 (with foam bed)

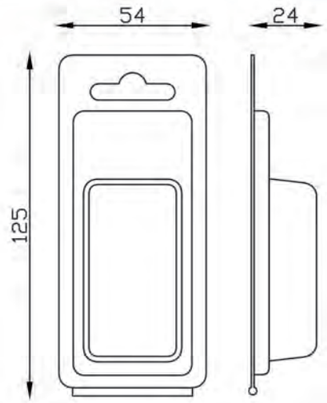

Blister A

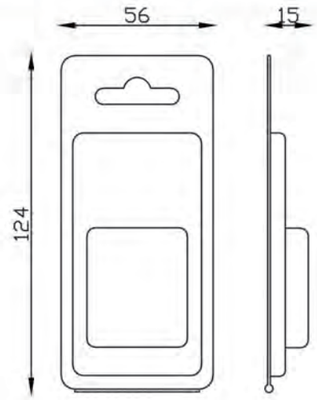

Blister B

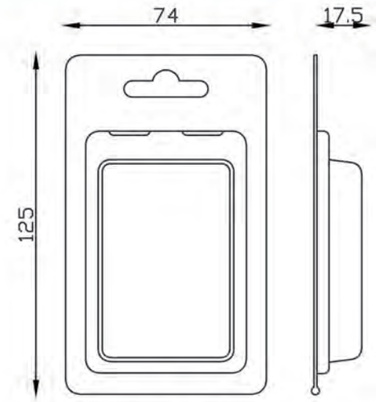

Blister G

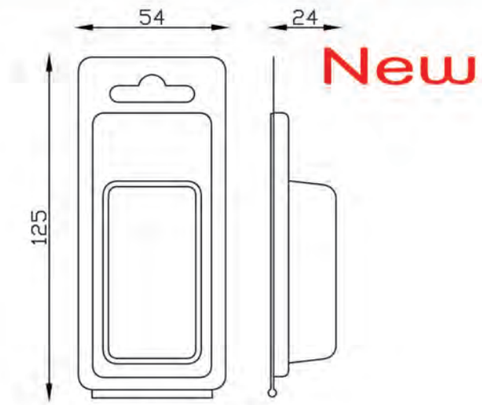

Blister new A

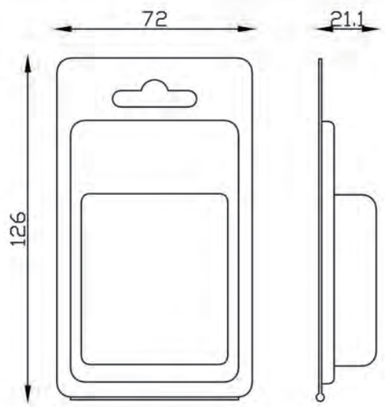

Blister C

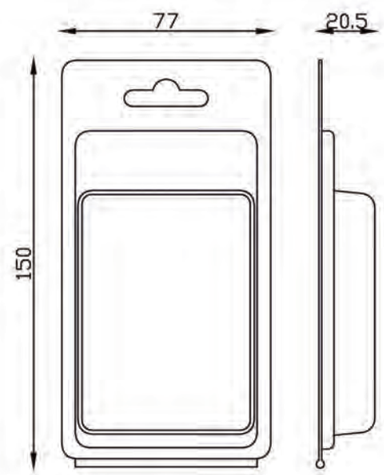

Blister D

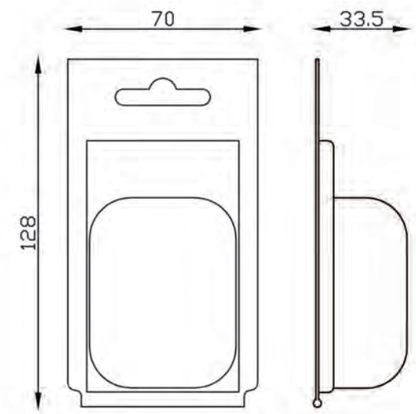

Blister J

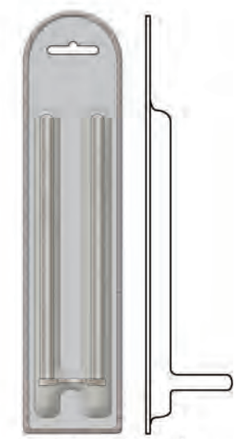

Blister Rod Guards

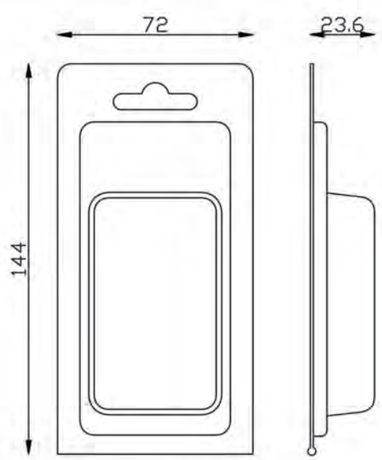

Blister E

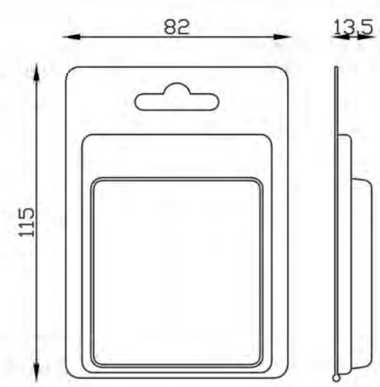

Blister F

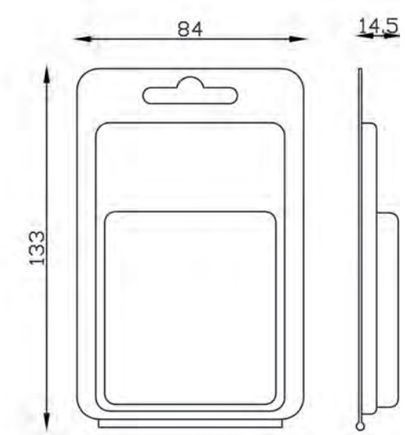

Blister P

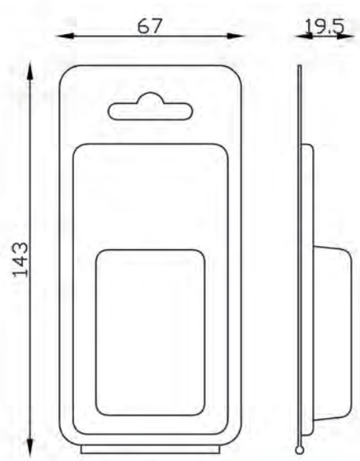

Blister Q (for Plastic box 6)

INNOVATION IS OUR STRENGTH HOLLY CREATIONS FISHING TACKLE OFF THE MENU PACKAGING

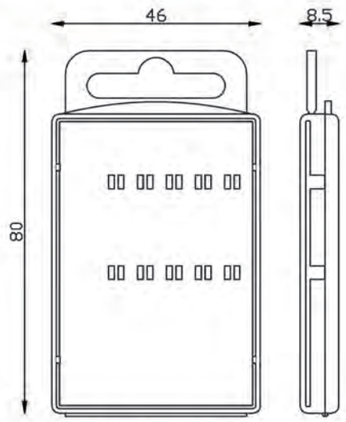

Special hook box 1

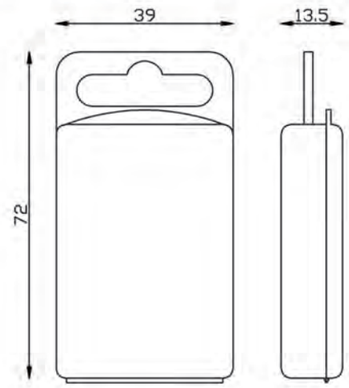

Plastic box 4

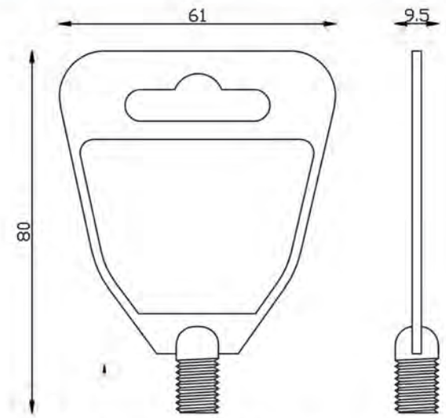

Bankstick & buzzerbar hangtag

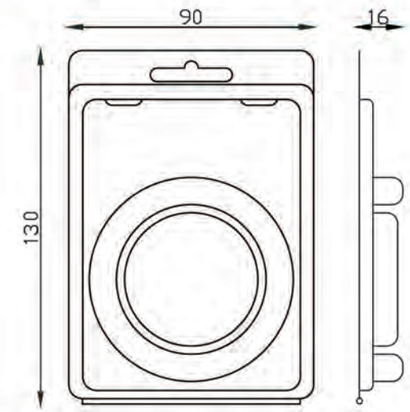

Blister Z

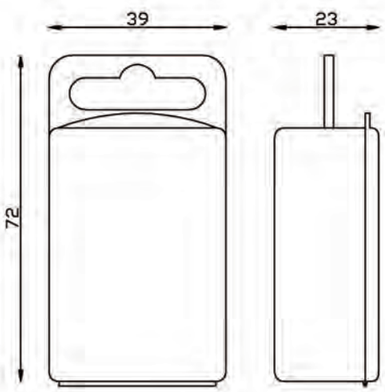

Plastic box 5

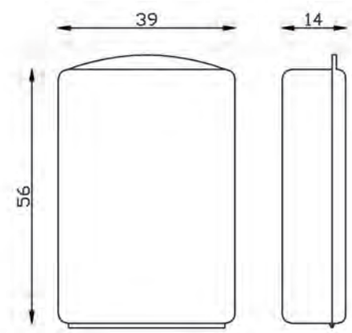

Plastic box 6

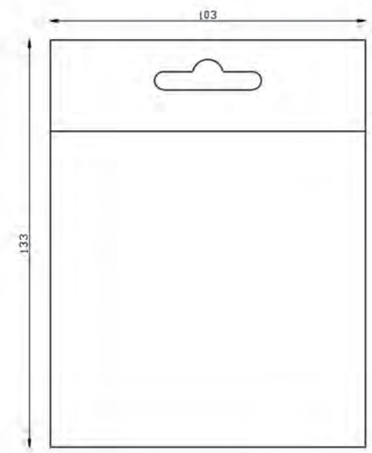

PET blisterbox (for Spool 5)

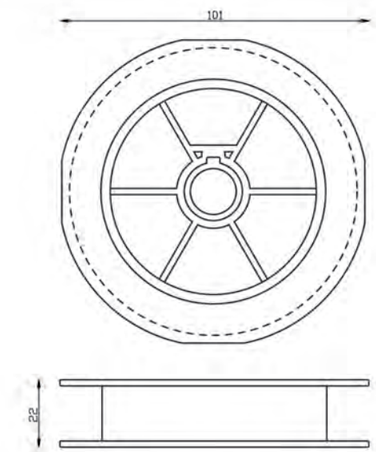

Spool 5

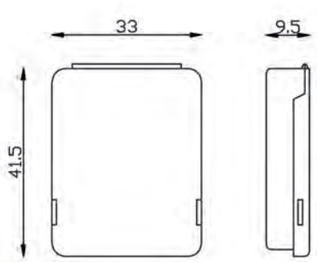

Plastic box 1 (fits perfectly in Blister B)

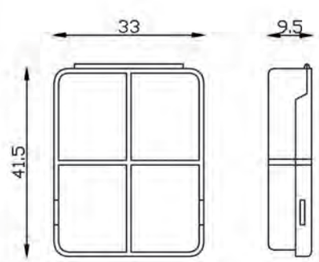

Plastic box 2 (fits perfectly in Blister B)

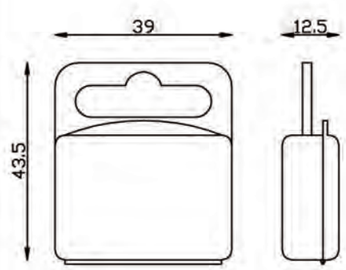

Plastic box 3

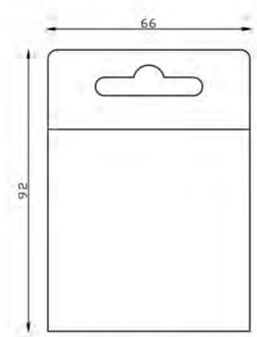

PET blisterbox (for Spool 4)

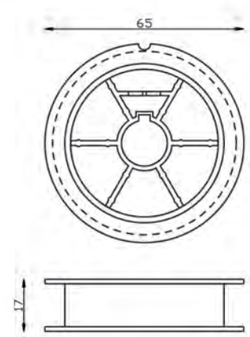

Spool 4

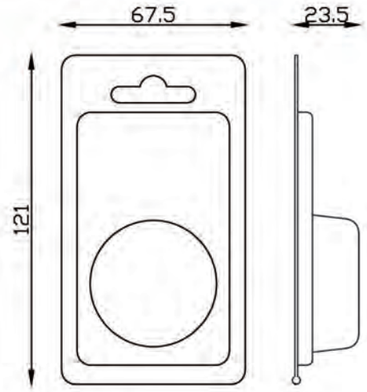

Blister S (for Spool 1)

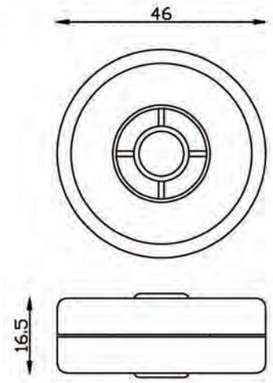

Spool 1

New

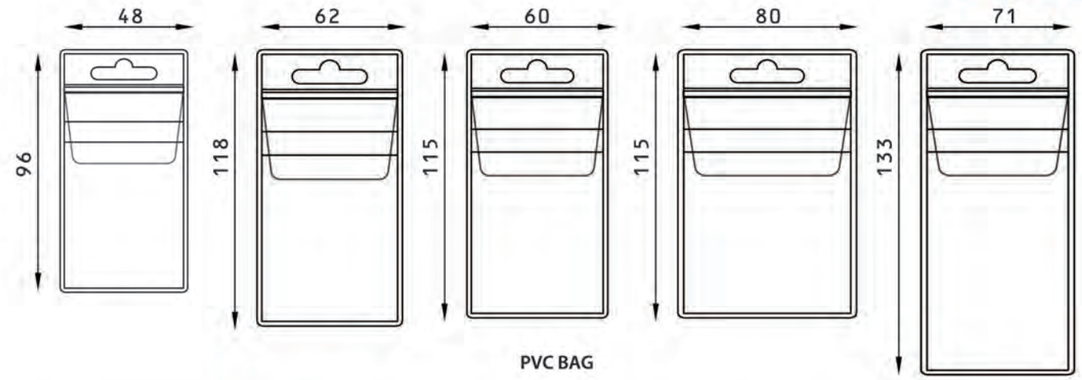

PVC BAG

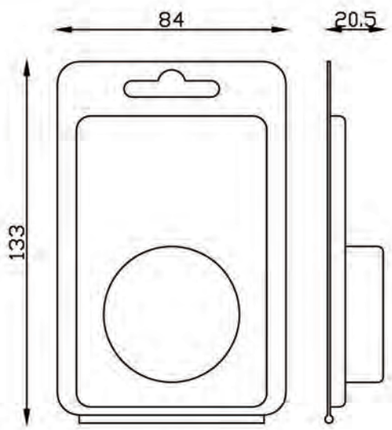

Blister W (for Spool 2)

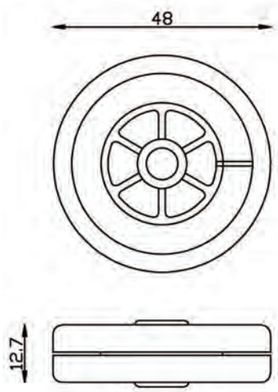

Spool 2

New

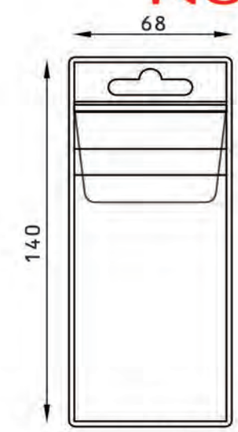

PVC BAG

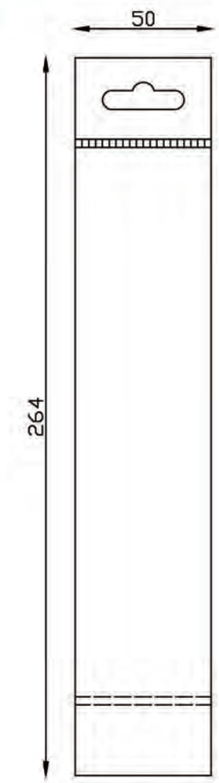

Carp rigs OPP bag

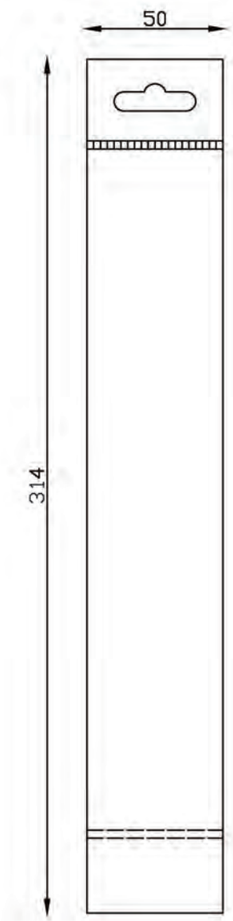

Carp rigs OPP bag XTRA long

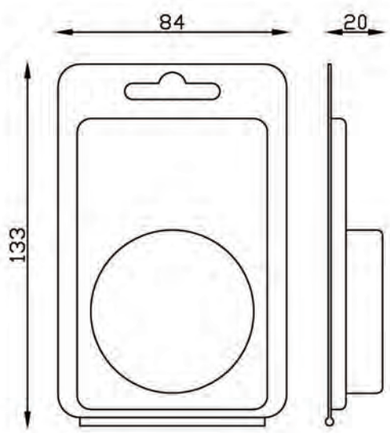

Blister X (for Spool 3)

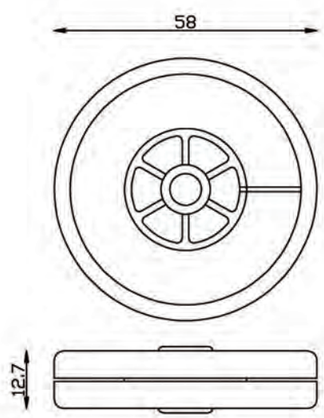

Spool 3

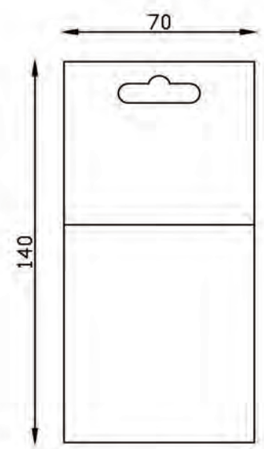

Headercard 1